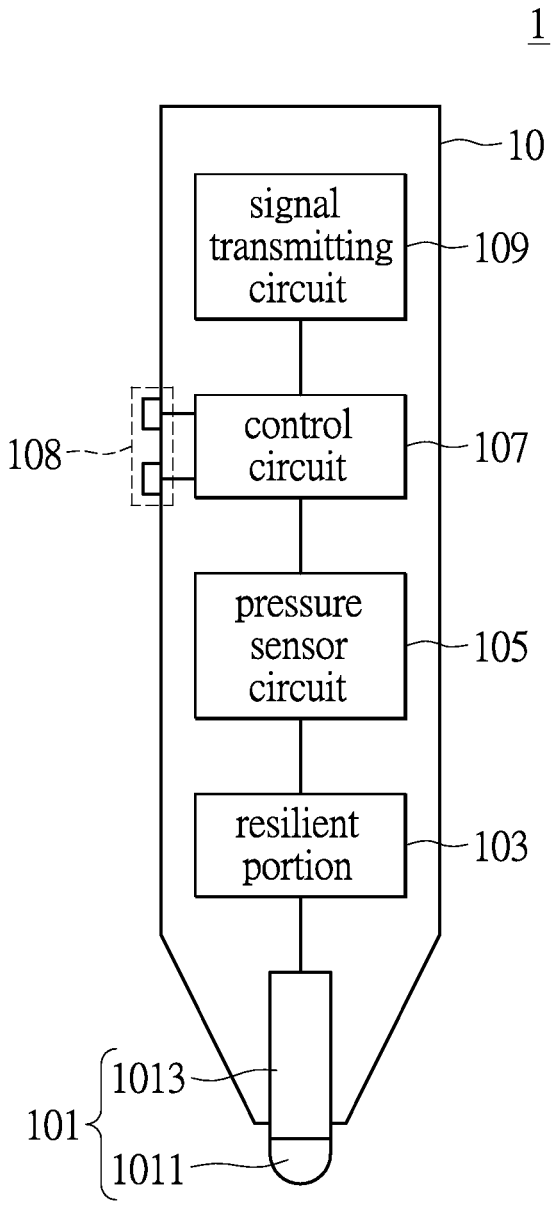
1
10
signal transmitting circuit
109
control circuit
107
108
pressure sensor circuit
105
resilient portion
103
1013
101
1011

FIG.1