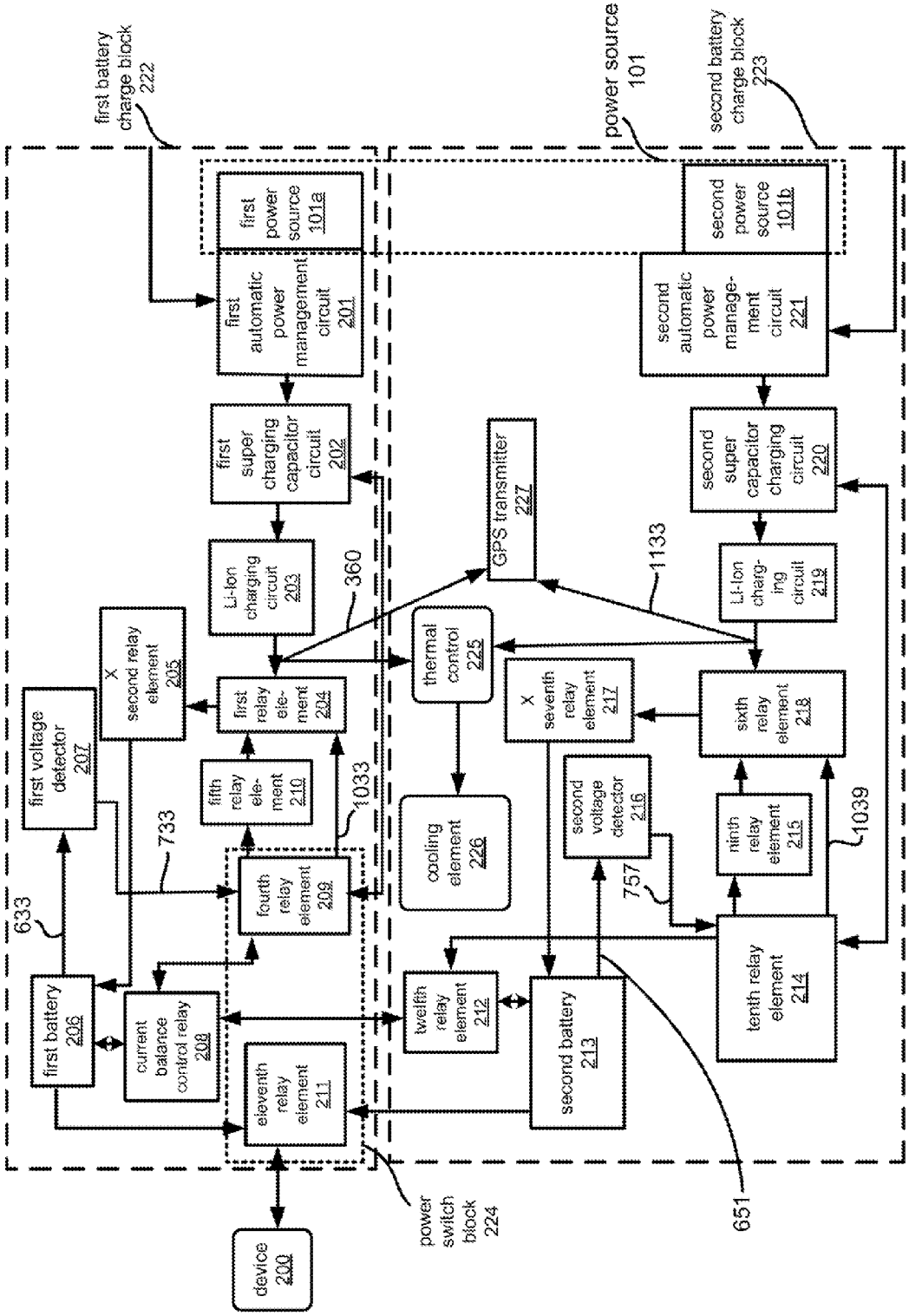
first battery charge block 222
power source 101
second battery charge block 223
first power source 101a
second power source 101b
first automatic power management circuit 201
second automatic power manage-ment circuit 221
first super charging capacitor circuit 202
second super capacitor charging circuit 220
Li-Ion charging circuit 203
Li-Ion charg-ing circuit 219
GPS transmitter 227
360
1133
X second relay element 205
first relay ele-ment 204
thermal control 225
X seventh relay element 217
sixth relay element 218
first voltage detector 207
fifth relay ele-ment 210
1033
cooling element 226
second voltage detector 216
ninth relay element 215
1039
733
fourth relay element 209
757
633
first battery 206
current balance control relay 208
twelfth relay element 212
second battery 213
tenth relay element 214
eleventh relay element 211
651
power switch block 224
device 200

FIG. 11