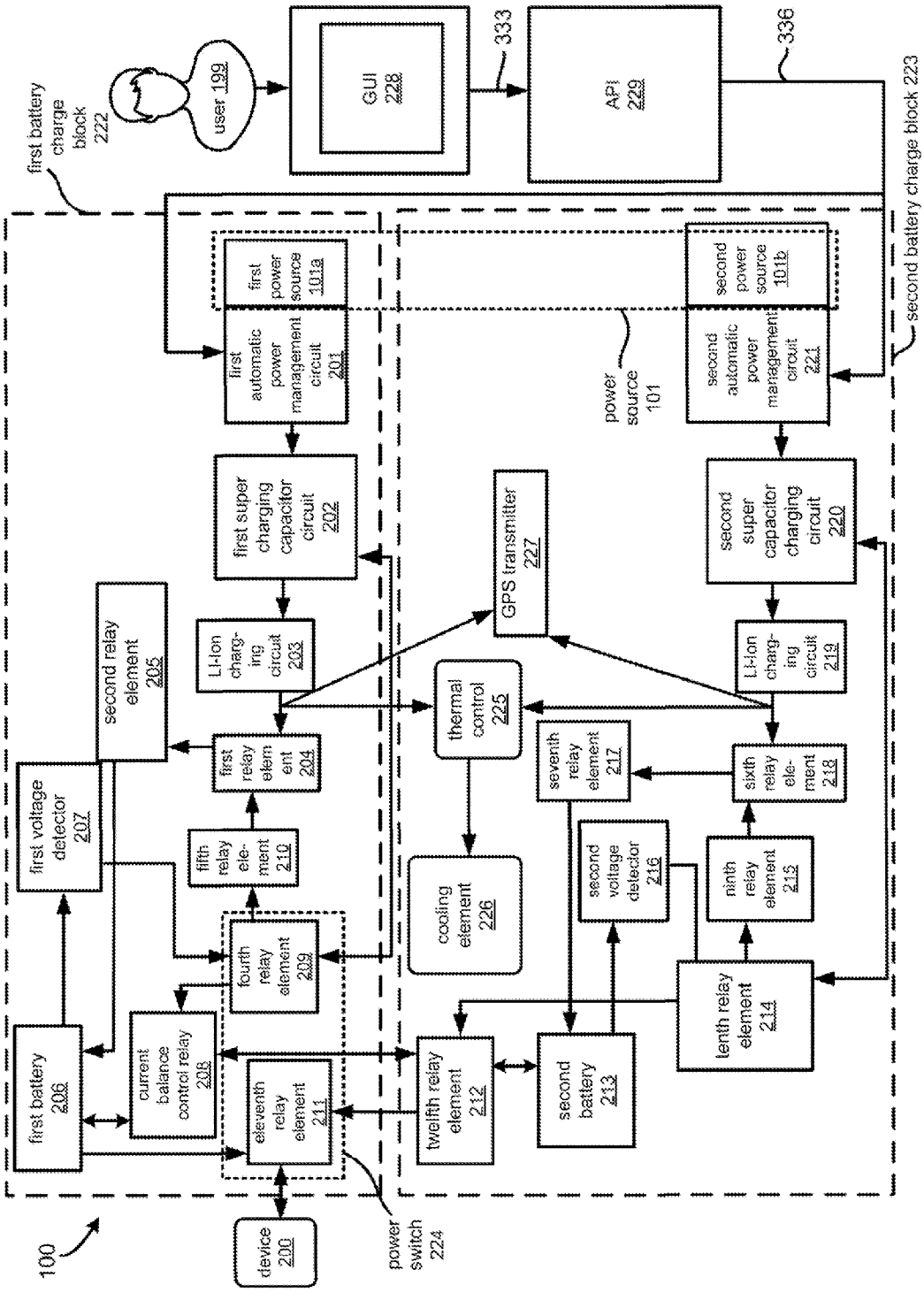
100
first battery charge block 222
user 199
GUI 228
333
API 229
336
second battery charge block 223
first power source 101a
first automatic power management circuit 201
power source 101
second power source 101b
second automatic power management circuit 221
first super charging capacitor circuit 202
second super capacitor charging circuit 220
GPS transmitter 227
Li-Ion charg-ing circuit 203
Li-Ion charg-ing circuit 219
thermal control 225
second relay element 205
first relay elem ent 204
seventh relay element 217
sixth relay ele-ment 218
first voltage detector 207
fifth relay ele-ment 210
second voltage detector 216
ninth relay element 215
cooling element 226
fourth relay element 209
tenth relay element 214
first battery 206
current balance control relay 208
eleventh relay element 211
twelfth relay element 212
second battery 213
device 200
power switch 224

FIG. 3a