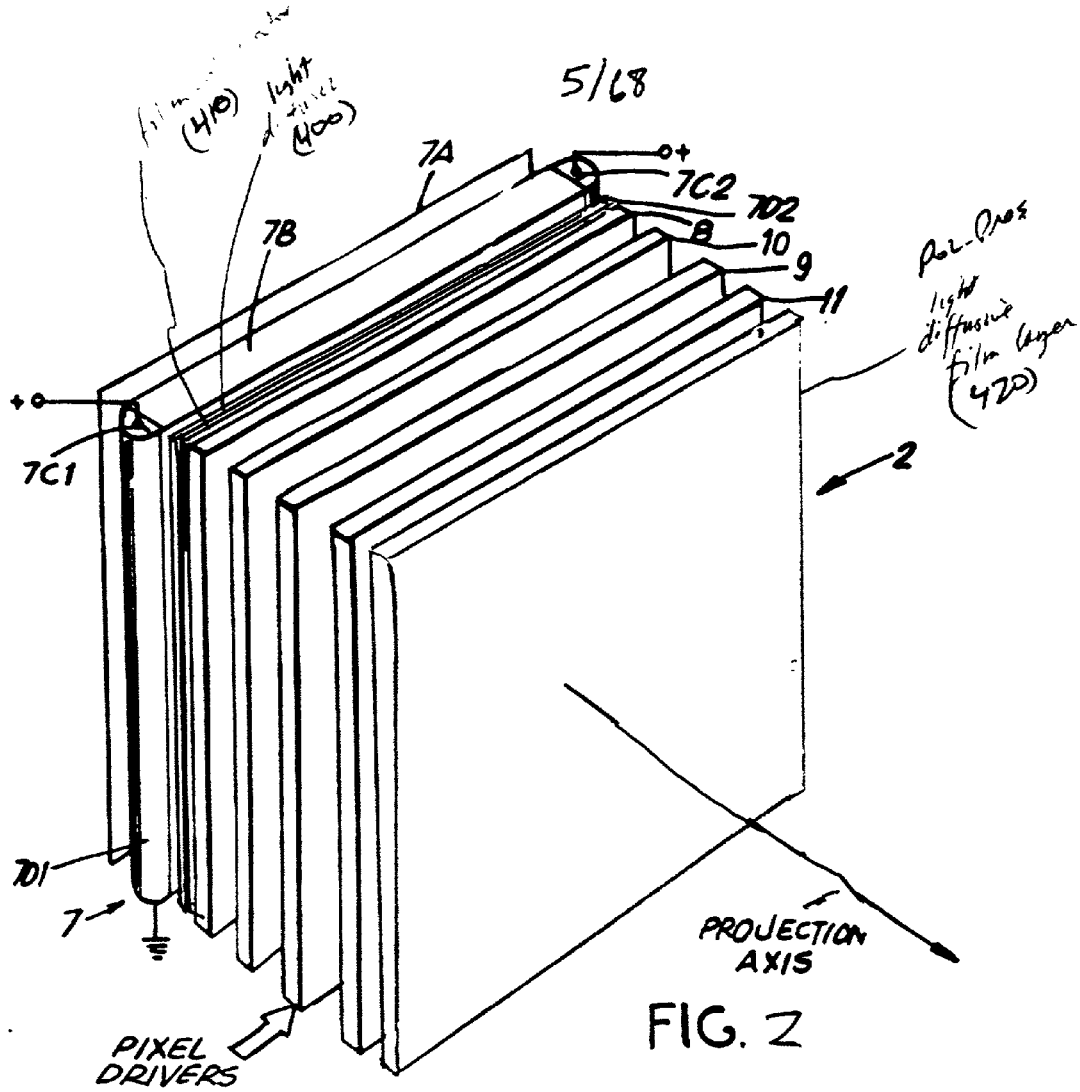
5/68
7A
7B
7C1
7C2
702
8
10
9
11
2
701
7
PIXEL DRIVERS
PROJECTION AXIS
light diffusive film layer (420)

FIG. 2

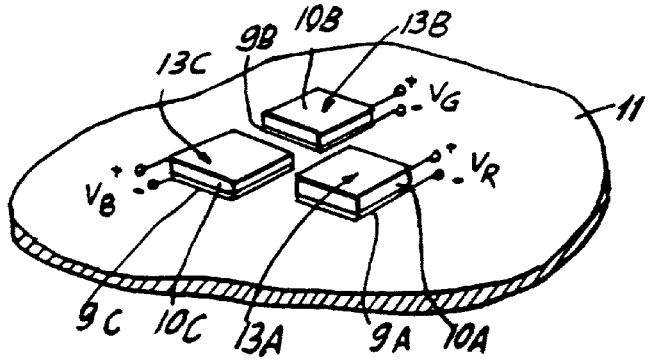
13C
9B
10B
13B
11
V_G
V_R
V_B
9C
10C
13A
9A
10A

FIG. 2A