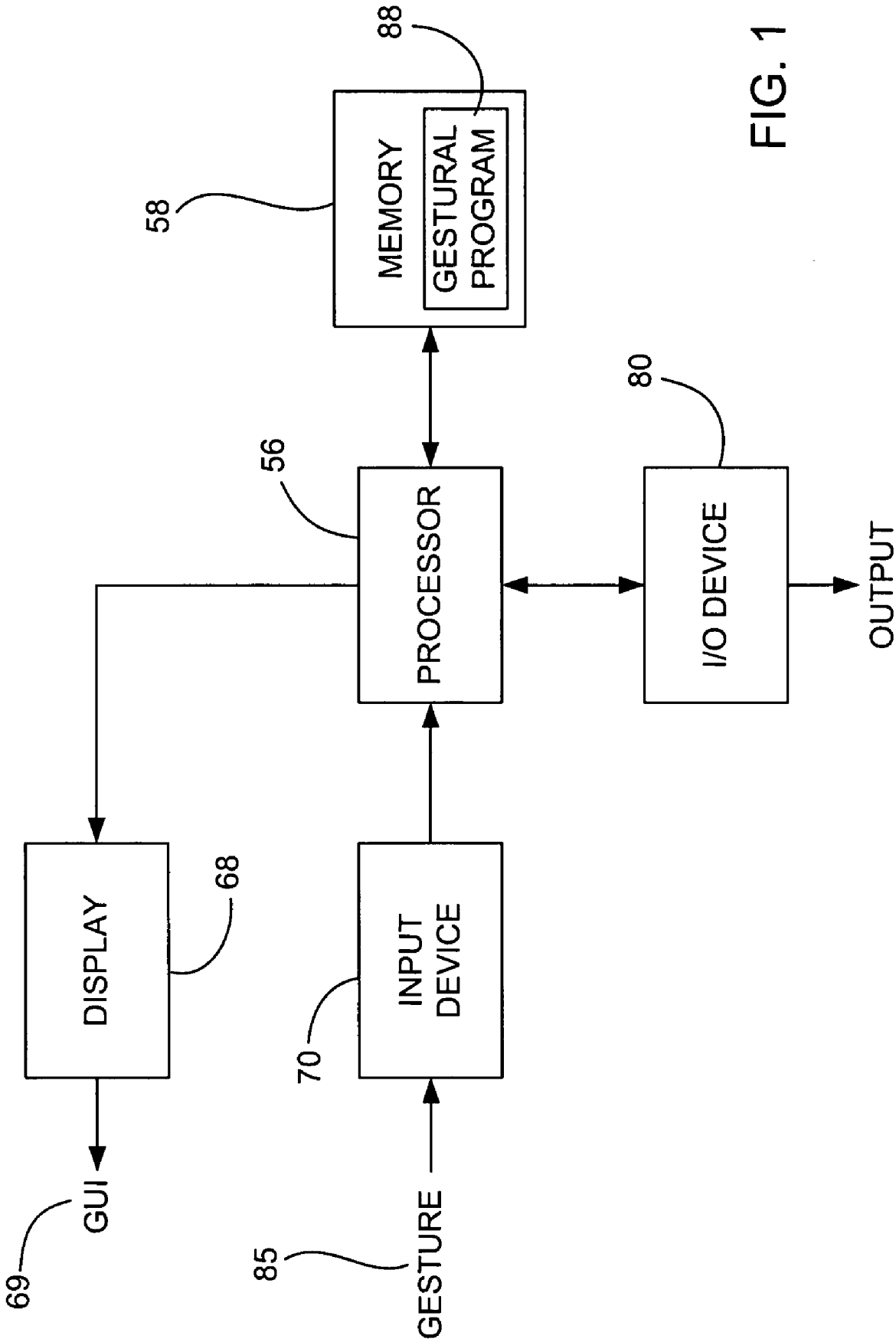
MEMORY
GESTURAL PROGRAM
88
58
PROCESSOR
56
I/O DEVICE
80
OUTPUT
DISPLAY
68
INPUT DEVICE
70
GUI
69
GESTURE
85

FIG. 1