US 20110017121A1

(19) United States

(12) Patent Application Publication

Willis

(10) Pub. No.: US 2011/0017121 A1

(43) Pub. Date: Jan. 27, 2011

(54) COLLAPSIBLE KAYAK

(76) Inventor: **Anton Michael Willis**, Oakland, CA (US)

Correspondence Address:
Howard Cohen
1105 The Alameda
Berkeley, CA 94707-2501 (US)

(21) Appl. No.: **12/804,357**

(22) Filed: **Jul. 20, 2010**

Related U.S. Application Data

(60) Provisional application No. 61/271,521, filed on Jul. 21, 2009.

Publication Classification

(51) **Int. Cl.**
B63B 7/00 (2006.01)

(52) **U.S. Cl.** **114/347**

(57) **ABSTRACT**

A collapsible watercraft is comprised of a single high-strength foldable panel to fold into the form of a kayak with integrally defined keel, hull, sides, and deck. Using a single sheet of high strength panel creased in a predetermined pattern to form living hinges, the panel may be folded and transformed from self-defined compact knocked down package, into a rigid three dimensional tubular manifold in a kayak form that is optimized for performance in the water. Other removable rigid structural members, primarily a cockpit rim, rib, and floorboards help maintain the shape and integrity of the shell.

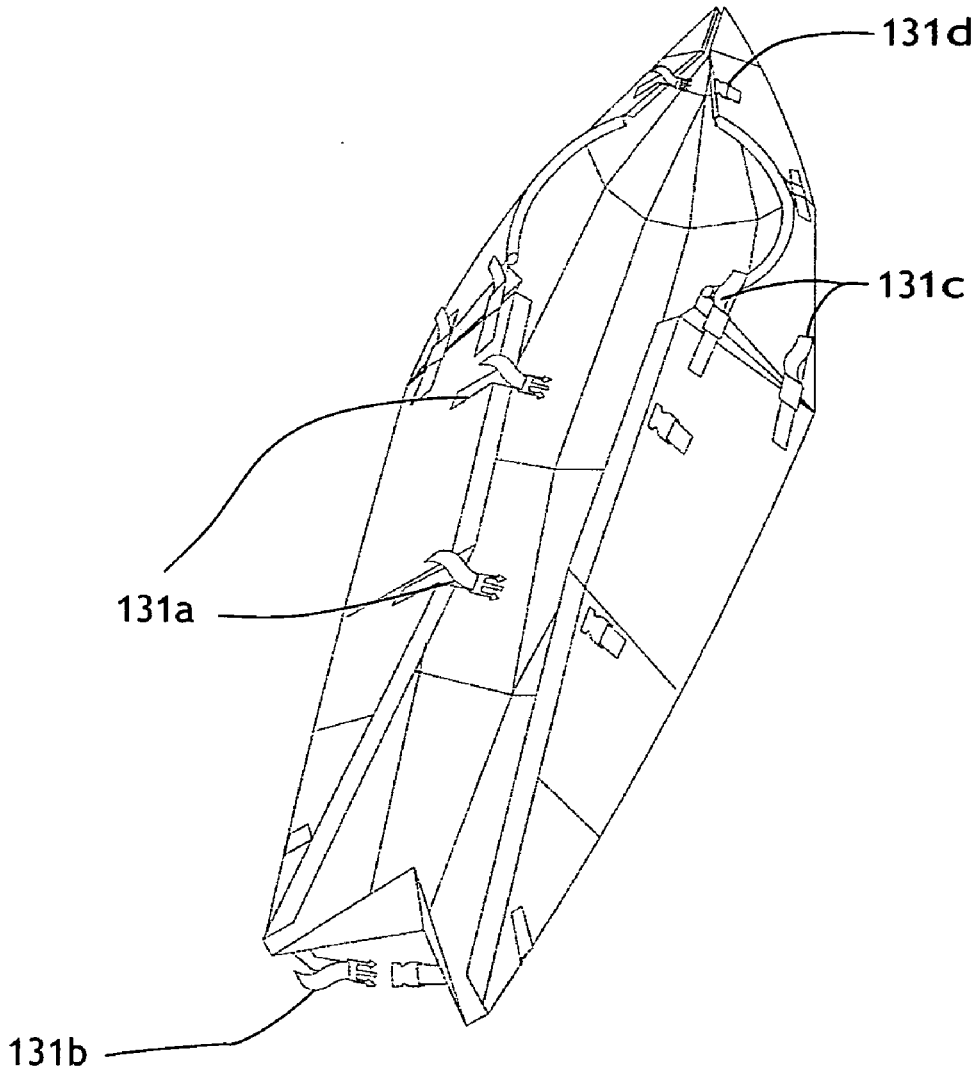

FIG. 7