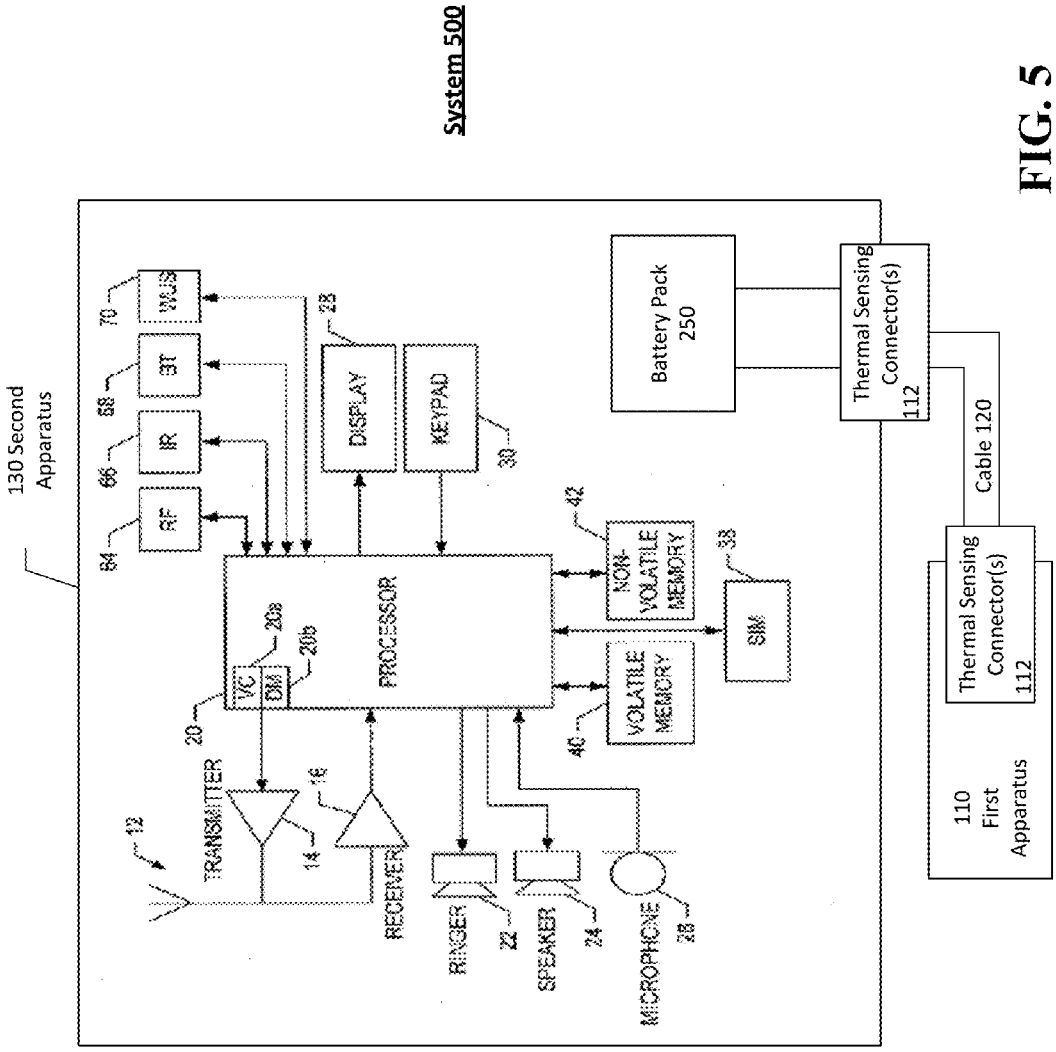
System 500
130 Second Apparatus
RF
IR
BT
WUS
DISPLAY
KEYPAD
PROCESSOR
VC
DM
NON-VOLATILE MEMORY
VOLATILE MEMORY
SIM
TRANSMITTER
RECEIVER
RINGER
SPEAKER
MICROPHONE
Battery Pack 250
Thermal Sensing Connector(s) 112
Cable 120
Thermal Sensing Connector(s) 112
110 First Apparatus

FIG. 5