FIG. 2

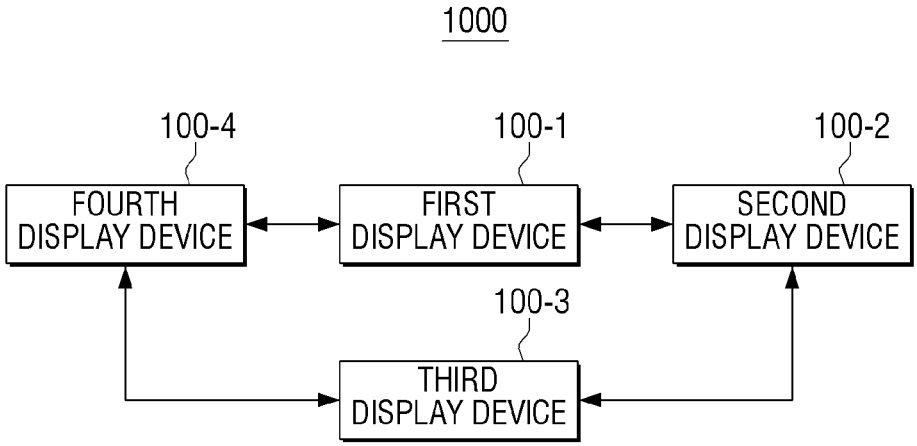
1000
100-4
FOURTH DISPLAY DEVICE
100-1
FIRST DISPLAY DEVICE
100-2
SECOND DISPLAY DEVICE
100-3
THIRD DISPLAY DEVICE