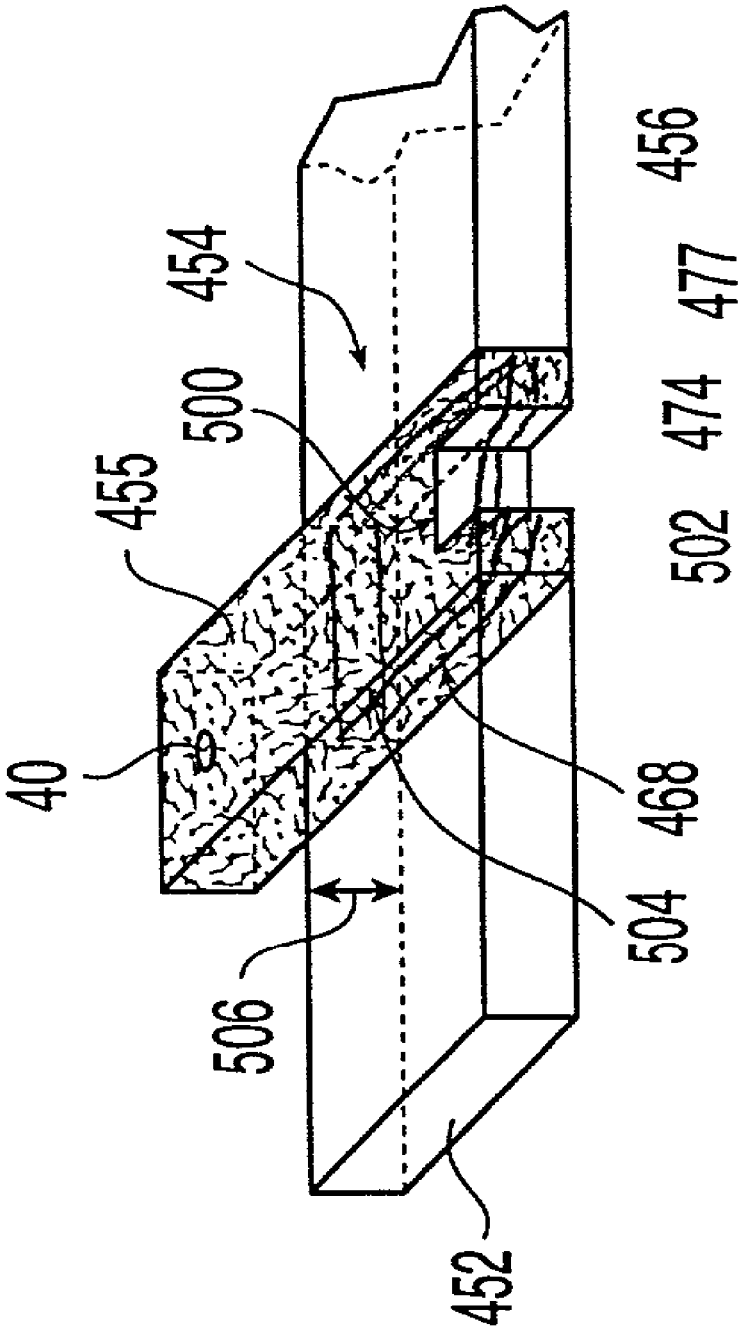

Fig. 11d