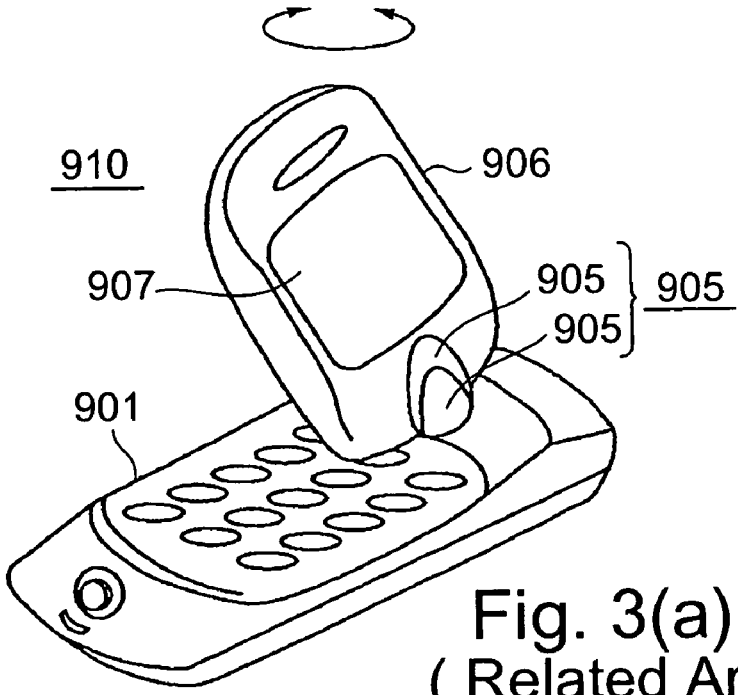

Fig. 3(a)
(Related Art)

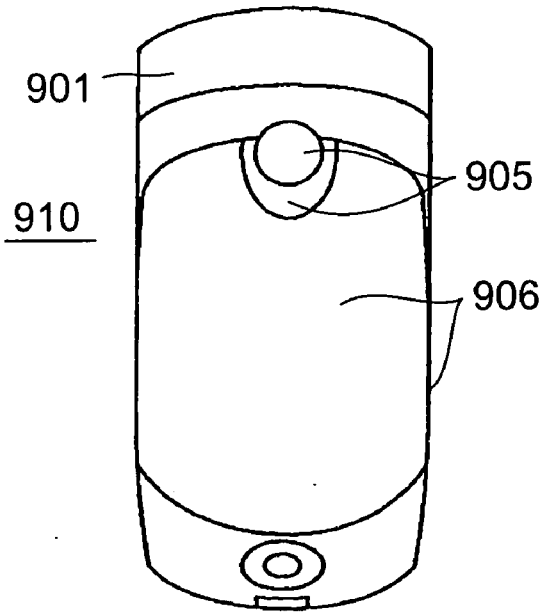

Fig. 3(b)
(Related Art)

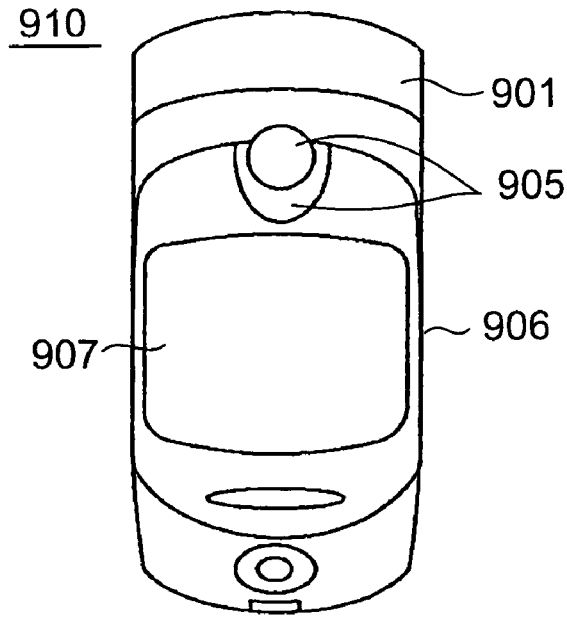

Fig. 3(c)
(Related Art)