FIG. 14

Dimensions:	36 gauge copper wire 350 turns (N), ID = 1.15 mm
Inductance:	$L=\mu N^2A/d=77$ mH
Resistance:	$R=5\text{-}8\Omega$
Field strength: (center, vertical 300mA)	Theoretical: $\mu_{Fe}\ \mu_0\ I\ n = 211$ Gauss Measured: 340 Gauss
Transient time:	$\tau=L/R=10\text{-}15$ ms, Transition at $5\tau=60\text{-}75$ ms
Energy in Magnetic field: (300mA)	$E=0.5LI^2=3.5$ mJ (needs to dissipate)

Magnetic field at 300mA
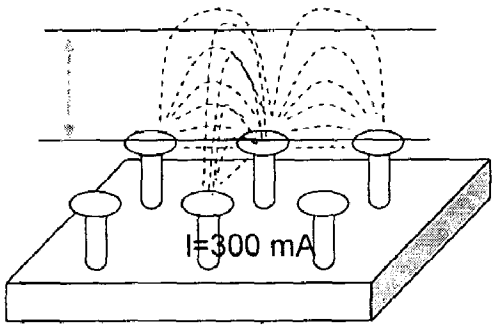
Height (h)	- 0 mm	Cover glass 0.2 mm	Biochip 0.5 mm	Glass Slide 1.2 mm
Vertical field strength	340 G	293 G	230 G	166 G