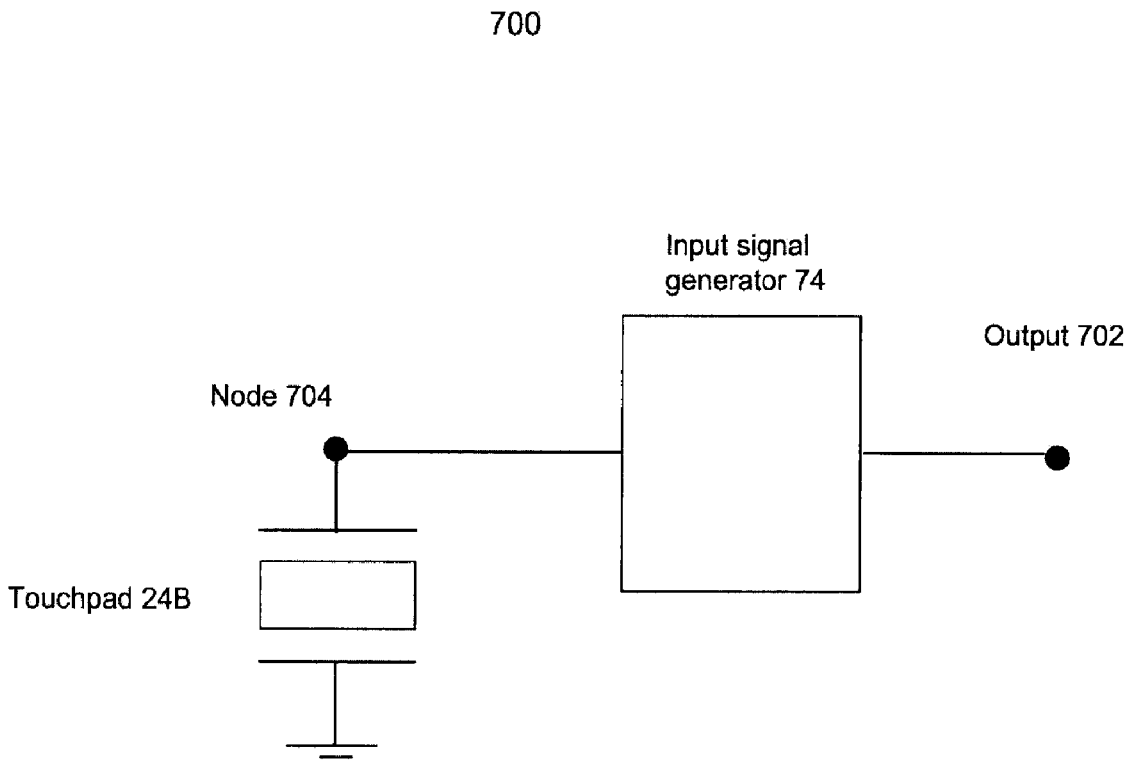
700
Input signal generator 74
Output 702
Node 704
Touchpad 24B

Fig. 7