US 20140181122A1

(19) United States

(12) Patent Application Publication

JAIN et al.

(10) Pub. No.: US 2014/0181122 A1

(43) Pub. Date: Jun. 26, 2014

(54) **GENERATING AND USING A CUSTOMIZED INDEX**

(71) Applicant: **MICROSOFT CORPORATION**, Redmond, WA (US)

(72) Inventors: **UTKARSH JAIN**, BELLEVUE, WA (US); **FAN WANG**, SAMMAMISH, WA (US); **MARTIN IRMAN**, RICHMOND (CA); **ANDRIJA ANTONIJEVIC**, BELLEVUE, WA (US); **XINGTAO WEI**, COQUITLAM, (CA); **SYED JAWAD**, VANCOUVER, (CA)

(73) Assignee: **MICROSOFT CORPORATION**, REDMOND, WA (US)

(21) Appl. No.: **13/722,544**

(22) Filed: **Dec. 20, 2012**

Publication Classification

(51) **Int. Cl.**
G06F 17/30 (2006.01)

(52) **U.S. Cl.**
CPC ***G06F 17/3053*** (2013.01)
USPC **707/749**; 707/748

(57) **ABSTRACT**
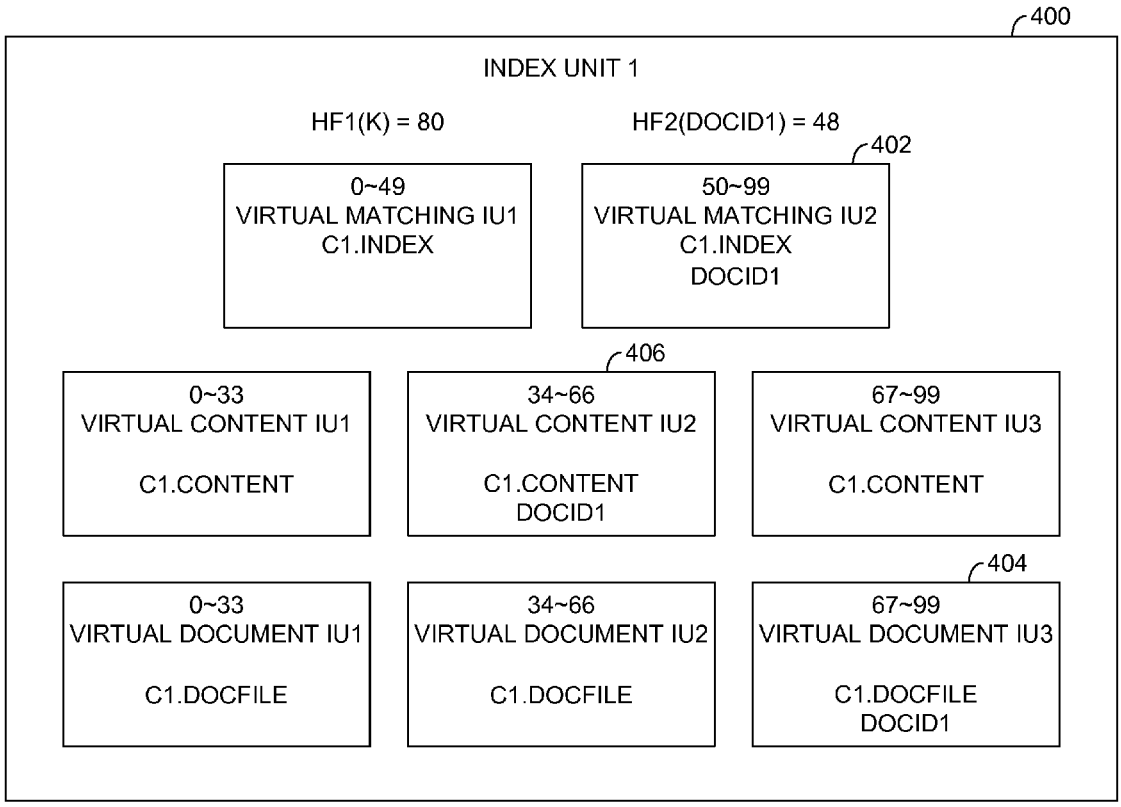
In various embodiments, systems and methods are provided for generating and using a customized index. In embodiments, an index structure is constructed to efficiently utilize machines containing index portions. In this regard, the index structure for a particular application is customizable such that a number of virtual index units for a particular index type and/or a number of machines associated with the virtual index units for the particular index type can be optimized for machine and/or system performance and efficiency. Utilizing the constructed index structure, documents can be distributed to various index units, virtual index units, and/or machines in real-time or near real-time. Further, the customized index structure can be used to efficiently serve search results in response to search queries.