US 20160067722A1

(19) United States

(12) Patent Application Publication

Nelson et al.

(10) Pub. No.: US 2016/0067722 A1

(43) Pub. Date: Mar. 10, 2016

(54) **AREA PROGRAMMABLE SPRINKLER**

(71) Applicants: **Rodney Lee Nelson**, Colbert, WA (US); **LaLonni Lee Nelson**, Colbert, WA (US)

(72) Inventors: **Rodney Lee Nelson**, Colbert, WA (US); **LaLonni Lee Nelson**, Colbert, WA (US)

(21) Appl. No.: **14/756,983**

(22) Filed: **Nov. 4, 2015**

Related U.S. Application Data

(63) Continuation of application No. 13/998,913, filed on Dec. 23, 2013, now Pat. No. 9,179,612, which is a continuation-in-part of application No. 13/573,585, filed on Sep. 26, 2012, which is a continuation-in-part of application No. 12/804,417, filed on Jul. 21, 2010, now Pat. No. 8,302,882.

Publication Classification

(51) **Int. Cl.**

B05B 3/02	(2006.01)
A01G 25/16	(2006.01)
B05B 15/10	(2006.01)

(52) **U.S. Cl.**

CPC ***B05B 3/021*** (2013.01); ***B05B 15/10*** (2013.01); ***A01G 25/16*** (2013.01)

(57) **ABSTRACT**
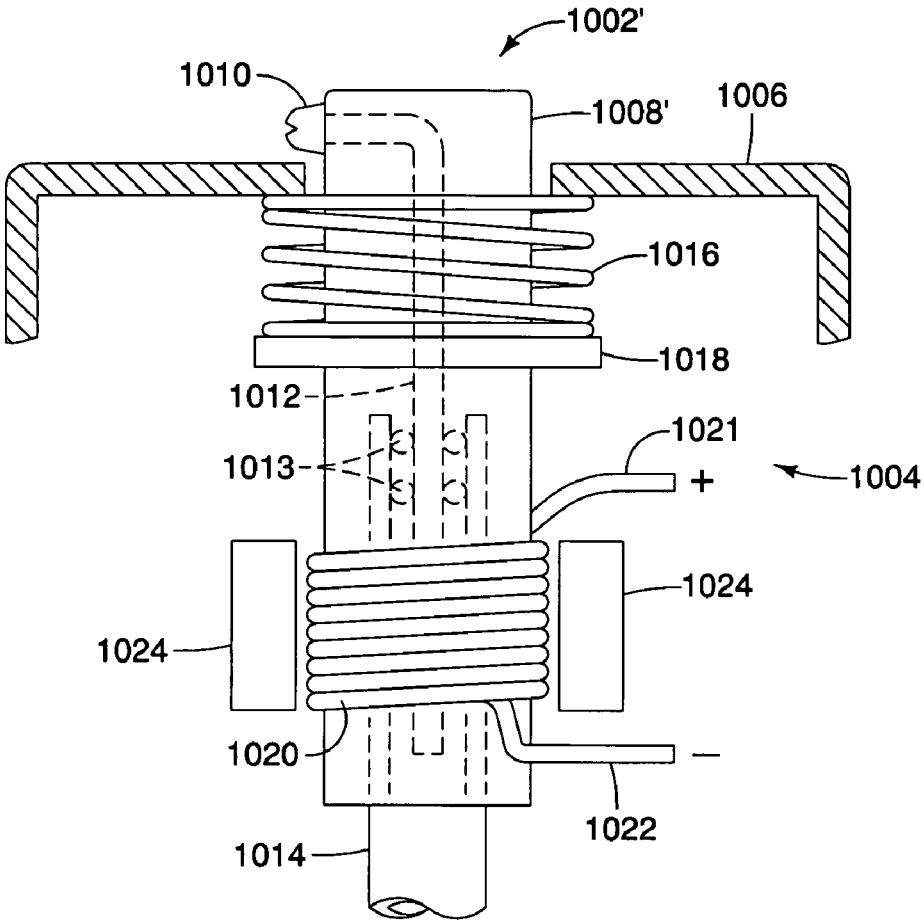
A controllable sprinkler includes a sprinkler head having a water discharge nozzle adapted to move between first and second sprinkler head positions via a sprinkler head positioner (such as a water motor), and a sprinkler head position determiner to determine a current sprinkler head position between the first and second positions. A flow control valve controls flow of water from a water supply to the discharge nozzle. A flow control valve positioner establishes a current control valve position of the flow control valve between essentially fully closed and essentially fully open positions. A water flow detector determines an approximation of water emanating from the control valve, and generates a water flow signal. A controller receives a sprinkler head position from the sprinkler head position determiner, and the water flow signal from the water flow detector, and in response sends a control valve control signal to the flow control valve positioner.