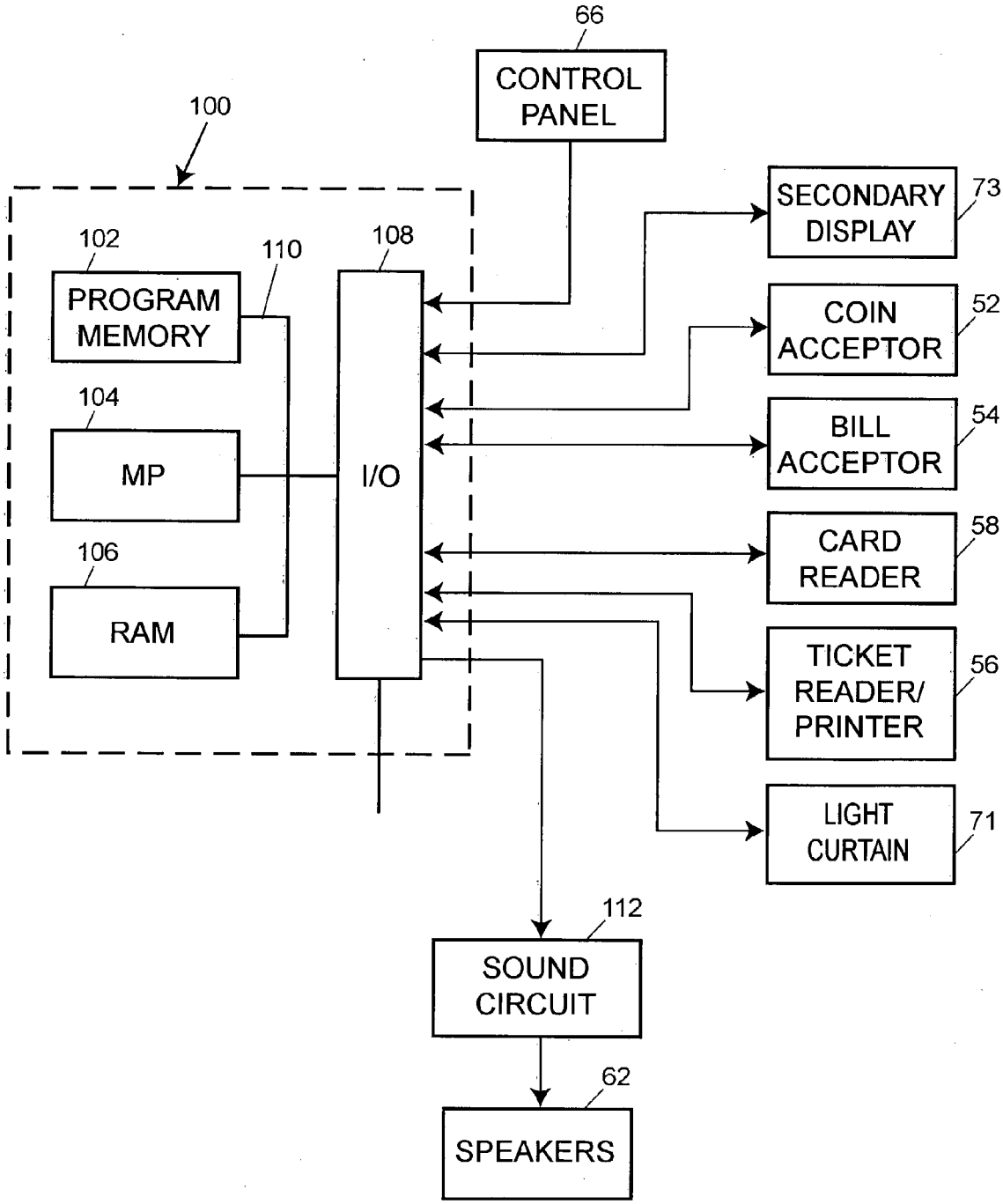
66
CONTROL PANEL
100
102
PROGRAM MEMORY
110
108
104
MP
I/O
106
RAM
SECONDARY DISPLAY
73
COIN ACCEPTOR
52
BILL ACCEPTOR
54
CARD READER
58
TICKET READER/ PRINTER
56
LIGHT CURTAIN
71
112
SOUND CIRCUIT
62
SPEAKERS

FIG. 3