Fig. 19-C
Top View

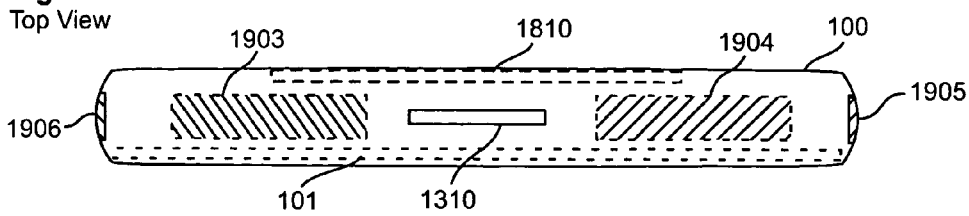

Fig. 19-A
Front View

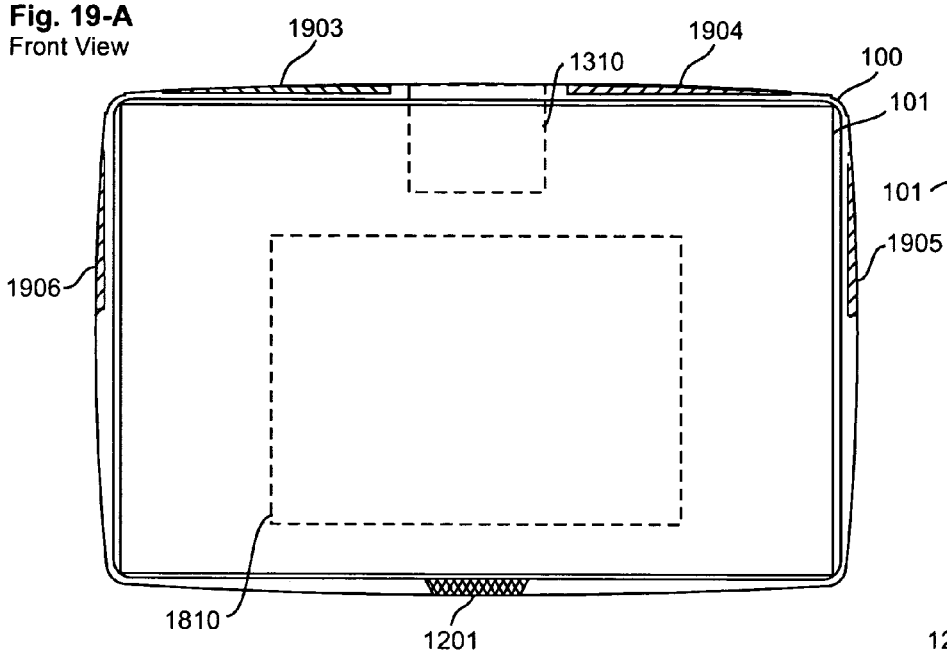

Fig. 19-D
Right Side View

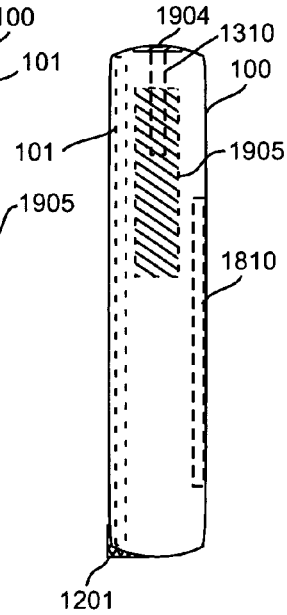
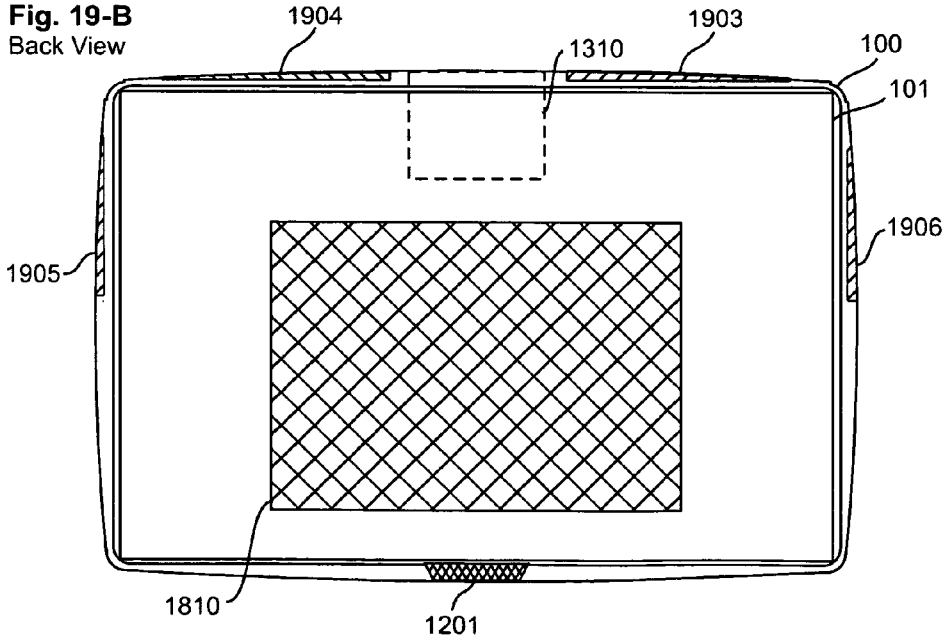
Fig. 19-B
Back View