Fig. 20-A
Right Side View
cover closed
over display

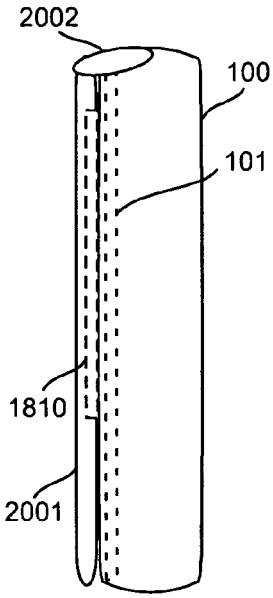

Fig. 20-B
Right Side View
cover partly open

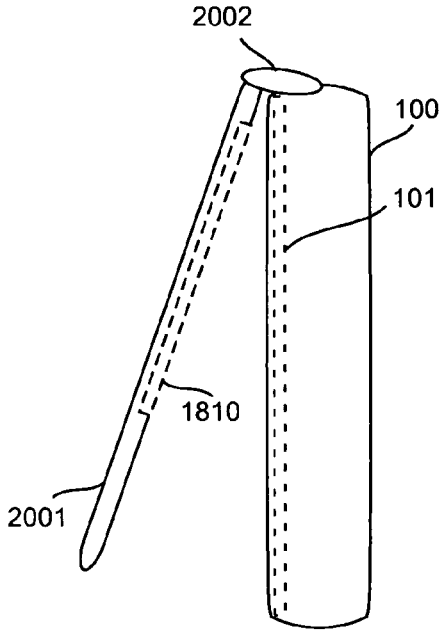
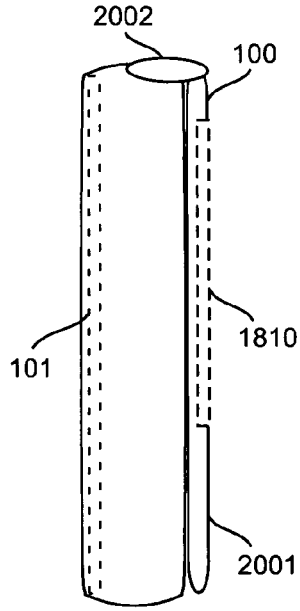
Fig. 20-C
Right Side View
cover open and
around back