Fig. 4
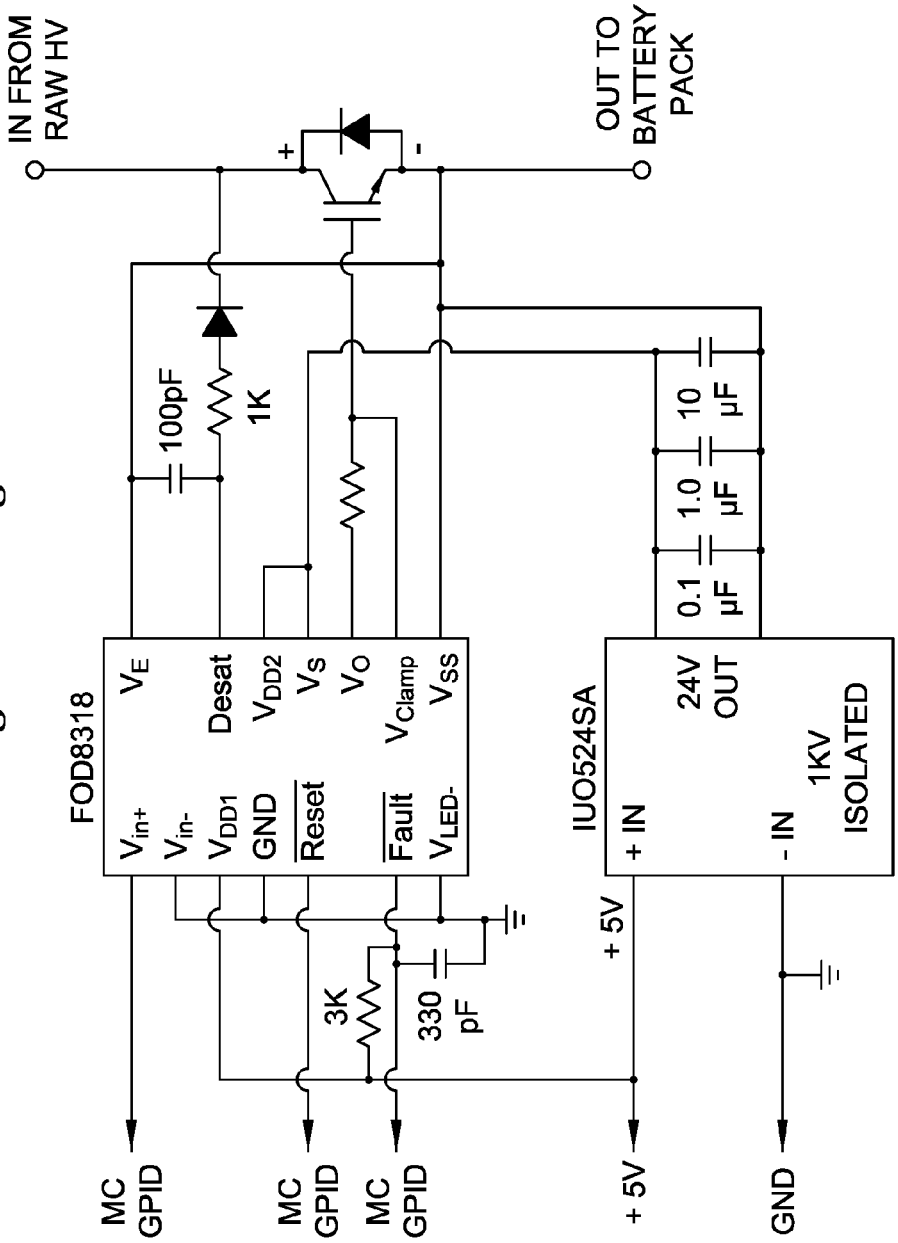
Detailed Charge Switching Circuit