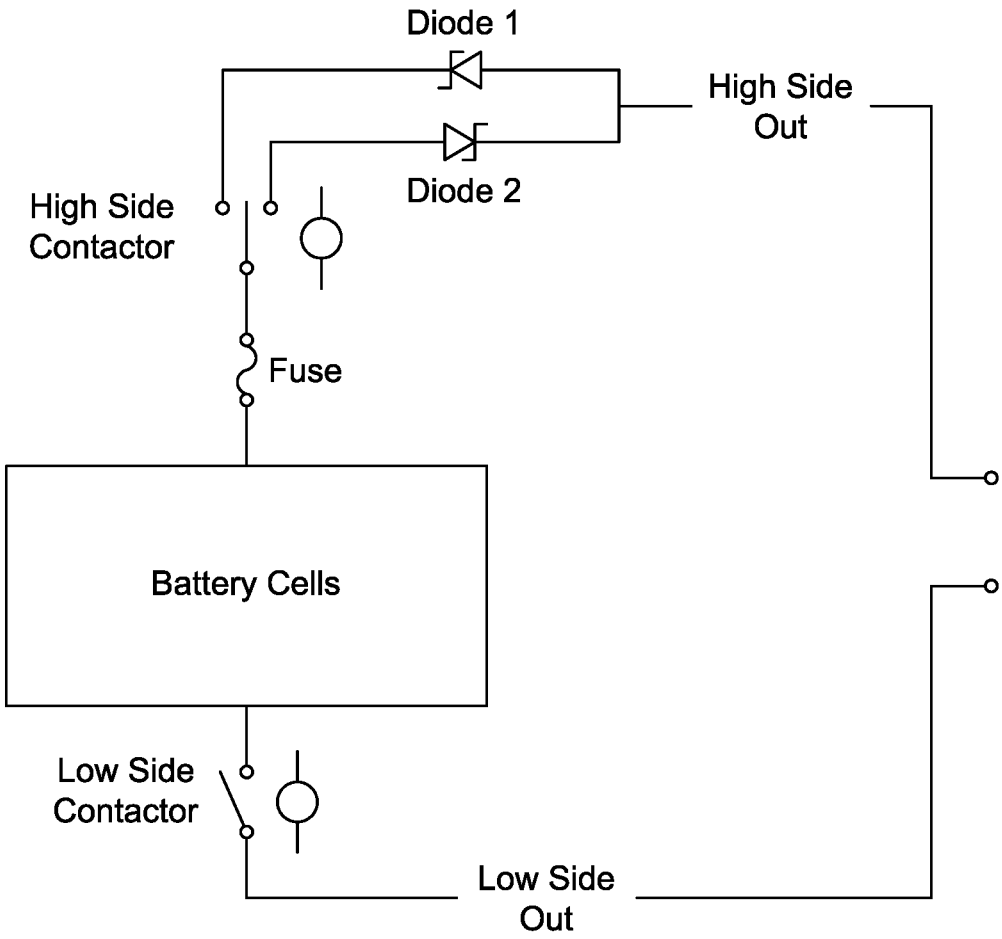

Fig. 6

Diode OR Circuit