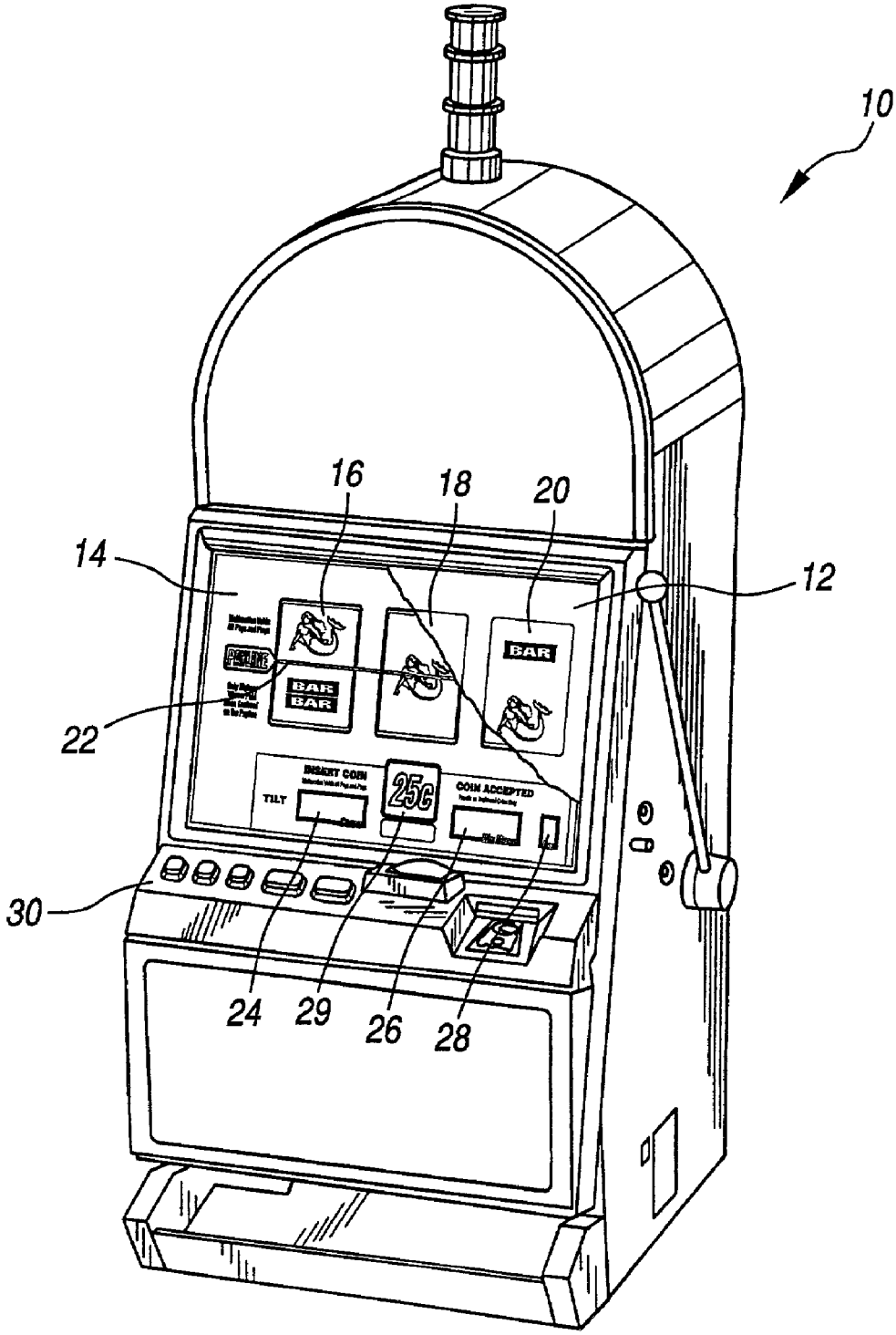
10
12
14
16
18
20
22
24
26
28
29
30
BAR
BAR
BAR
PAYLINE
INSERT COIN
TILT
25¢
COIN ACCEPTED

FIG. 1