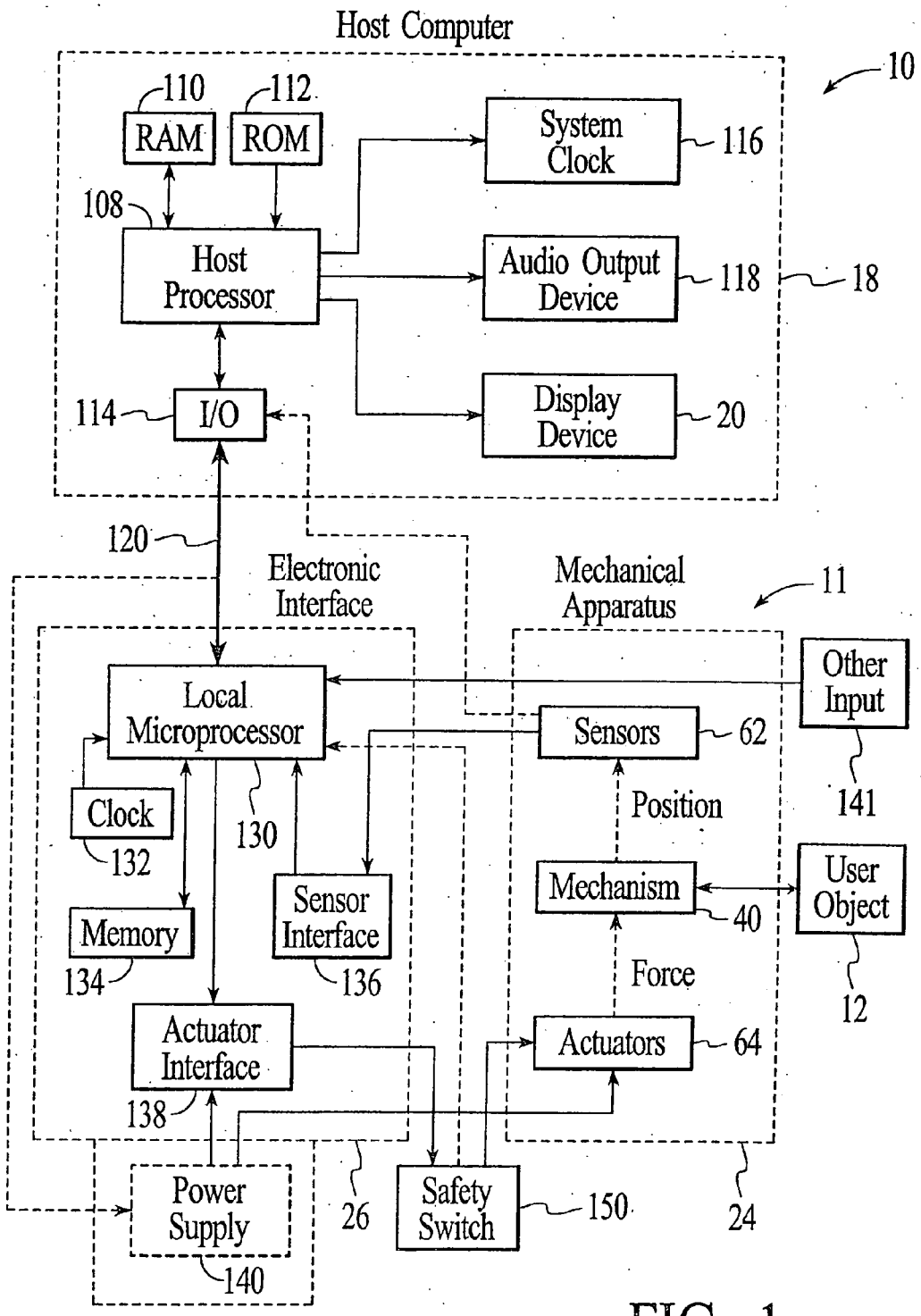
Host Computer
10
110
RAM
112
ROM
System Clock
116
108
Host Processor
Audio Output Device
118
18
114
I/O
Display Device
20
120
Electronic Interface
Mechanical Apparatus
11
Other Input
Local Microprocessor
Sensors
62
141
Clock
132
130
Position
Mechanism
User Object
40
Memory
134
Sensor Interface
136
Force
12
Actuator Interface
138
Actuators
64
Power Supply
140
26
Safety Switch
150
24

FIG. 1