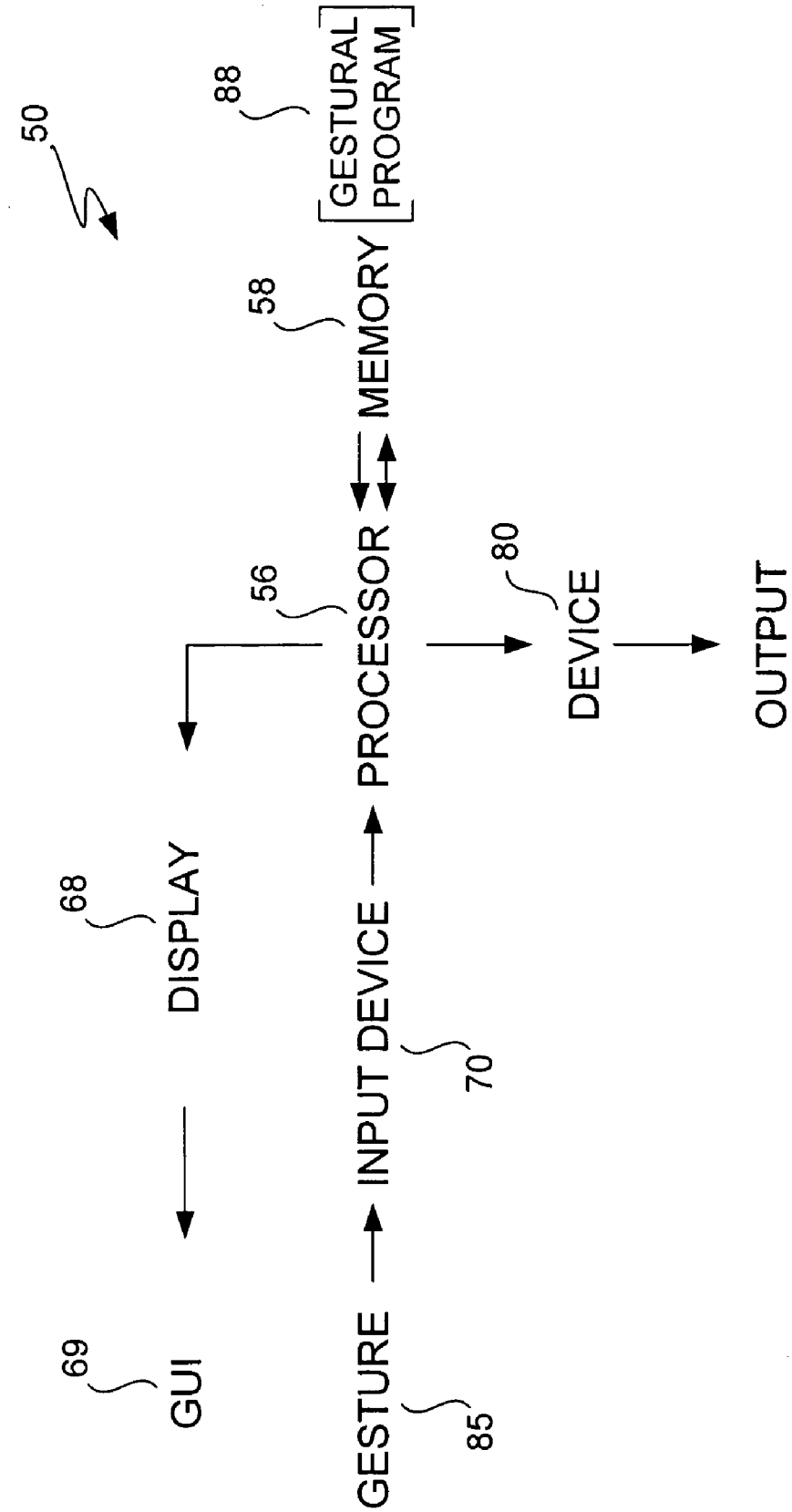
50
88
GESTURAL PROGRAM
58
MEMORY
56
PROCESSOR
80
DEVICE
OUTPUT
68
DISPLAY
INPUT DEVICE
70
69
GUI
GESTURE
85

FIG. 1-1