Fig. 1A

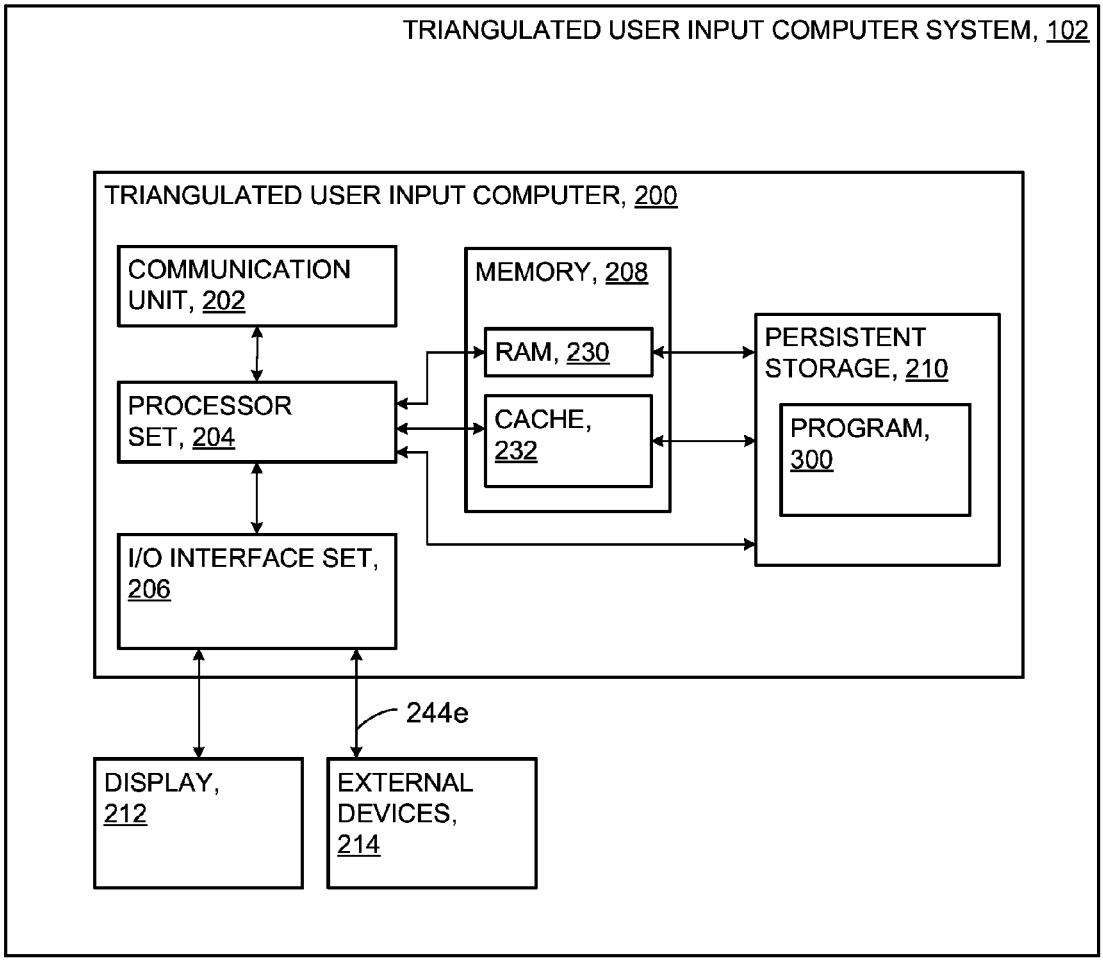
TRIANGULATED USER INPUT COMPUTER SYSTEM, 102
TRIANGULATED USER INPUT COMPUTER, 200
COMMUNICATION UNIT, 202
MEMORY, 208
RAM, 230
PERSISTENT STORAGE, 210
PROCESSOR SET, 204
CACHE, 232
PROGRAM, 300
I/O INTERFACE SET, 206
244e
DISPLAY, 212
EXTERNAL DEVICES, 214