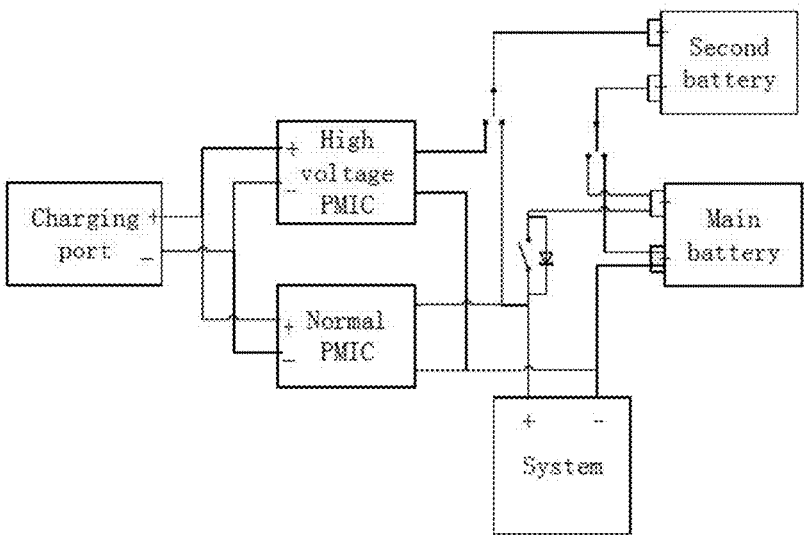
Second battery
High voltage PMIC
Charging port
Main battery
Normal PMIC
System

FIG 4