FIG. 3

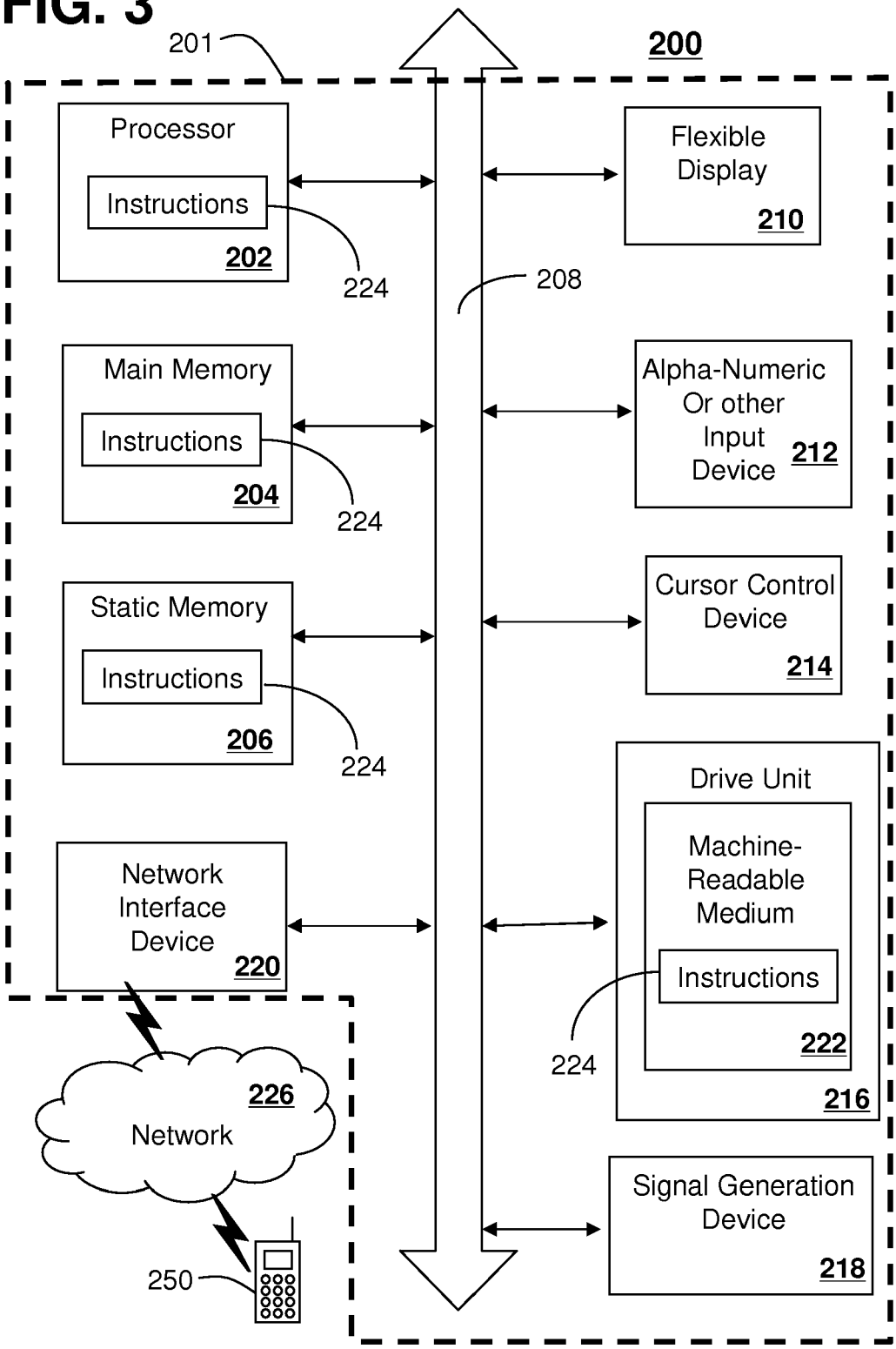
201
200
Processor
Instructions
202
224
Main Memory
Instructions
204
224
Static Memory
Instructions
206
224
Network Interface Device
220
226
Network
250
208
Flexible Display
210
Alpha-Numeric Or other Input Device
212
Cursor Control Device
214
Drive Unit
Machine-Readable Medium
Instructions
222
224
216
Signal Generation Device
218