US 20080291525A1

(19) United States

(12) Patent Application Publication

KIM et al.

(10) Pub. No.: US 2008/0291525 A1

(43) Pub. Date: Nov. 27, 2008

(54) **DISPLAY PIXEL USING ELECTROACTIVE POLYMER AND DISPLAY APPARATUS EMPLOYING THE SAME**

(75) Inventors: **Jin-hwan KIM**, Suwon-si (KR); **Byoung-ho Cheong**, Seoul (KR); **Hong-seok LEE**, Seongnam-si (KR)

Correspondence Address:
**SUGHRUE MION, PLLC**
**2100 PENNSYLVANIA AVENUE, N.W., SUITE 800**
**WASHINGTON, DC 20037 (US)**

(73) Assignee: **SAMSUNG ELECTRONICS CO., LTD.**, Suwon-si (KR)

(21) Appl. No.: **11/875,265**

(22) Filed: **Oct. 19, 2007**

(30) **Foreign Application Priority Data**

May 23, 2007 (KR) ..... 10-2007-0050263

**Publication Classification**

(51) **Int. Cl.**
*G02F 1/25* (2006.01)

(52) **U.S. Cl.** ..... **359/291**

(57) **ABSTRACT**
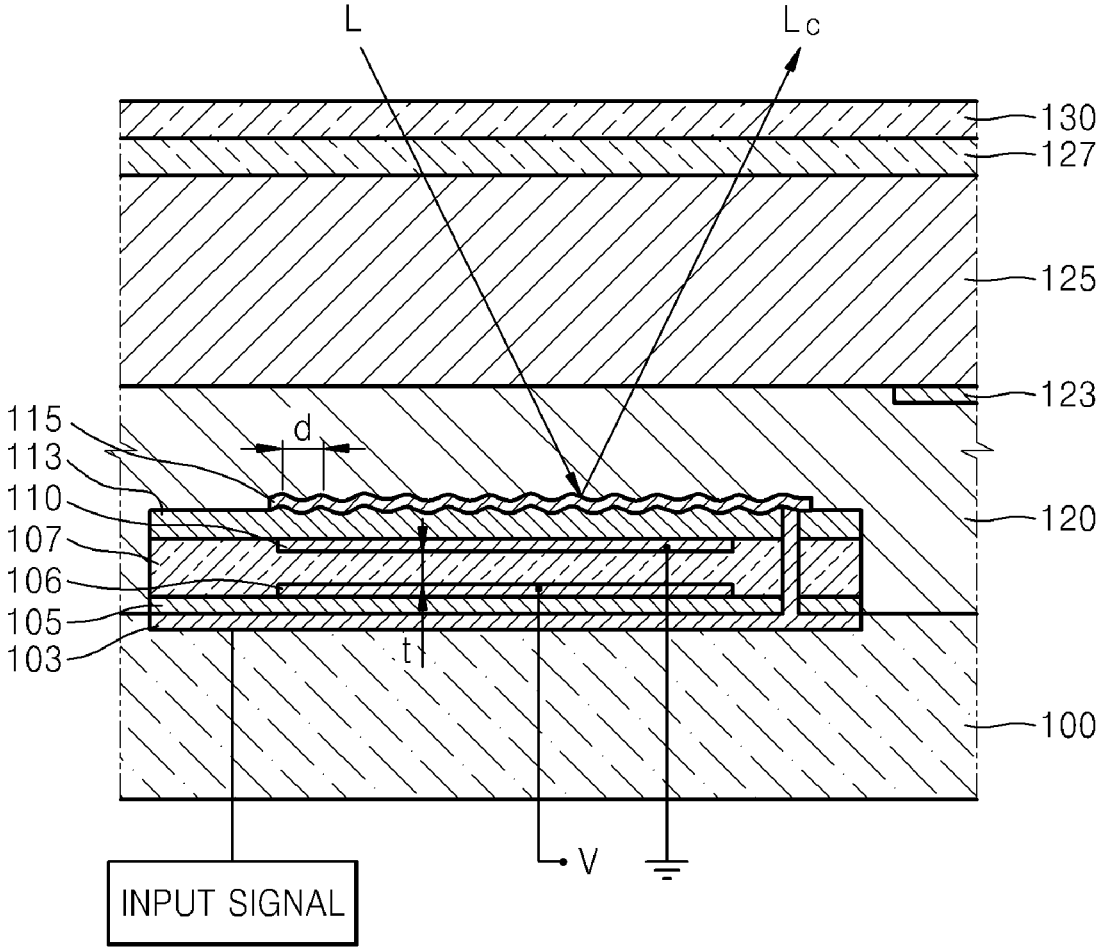
Provided are a display pixel using an electroactive polymer and a display apparatus employing the display pixel. The display pixel includes: an electroactive polymer layer, of which shape and/or size is displaced when a voltage is applied thereto; a diffraction grating, of which a pitch and a diffraction angle change according to a displacement of the electroactive polymer layer; and a liquid crystal layer disposed on the diffraction grating and controlling gradation according to a voltage applied thereto.