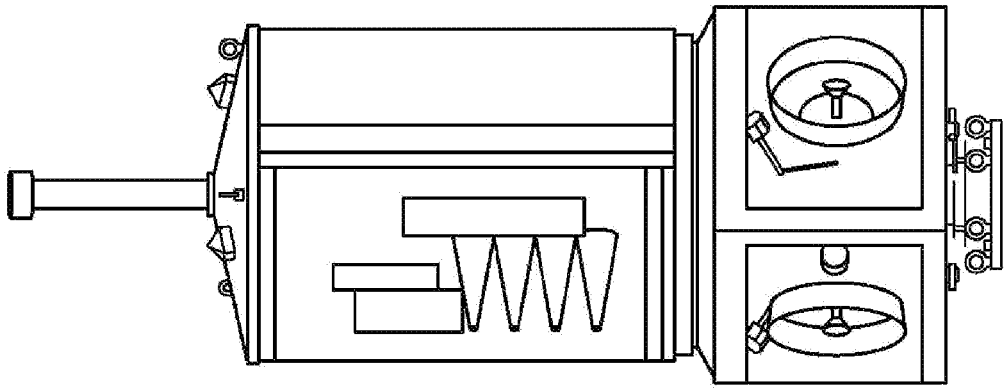

FIG. 2 (Prior Art)

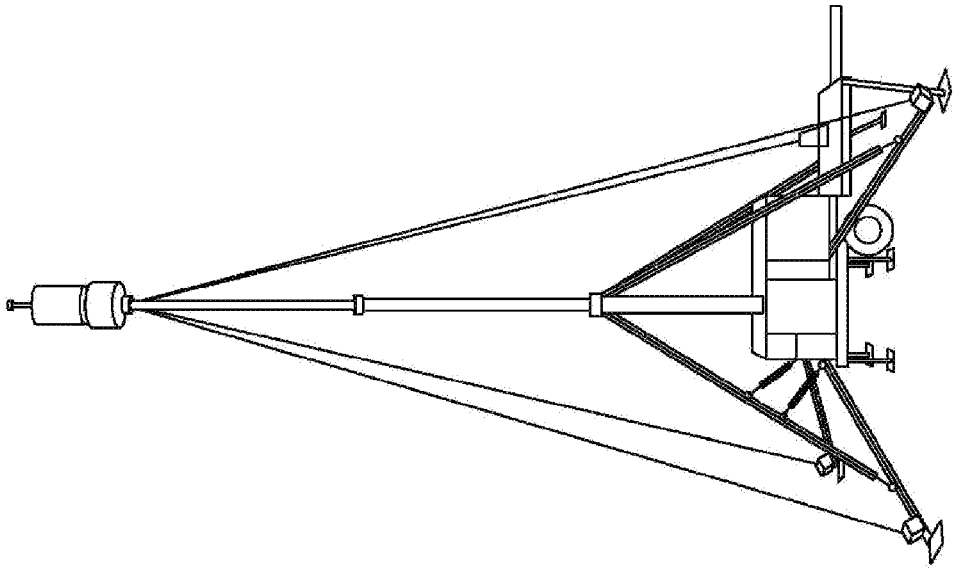

FIG. 1 (Prior Art)