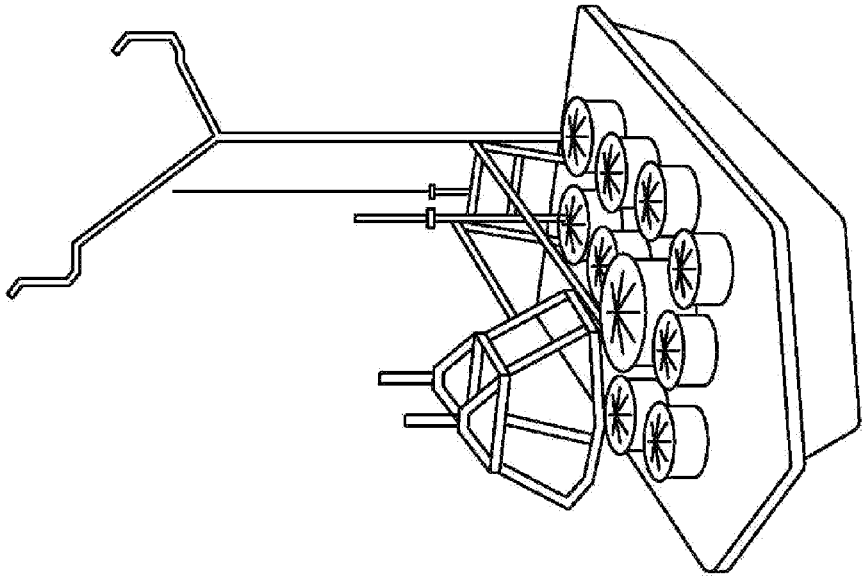

FIG. 4 (Prior Art)

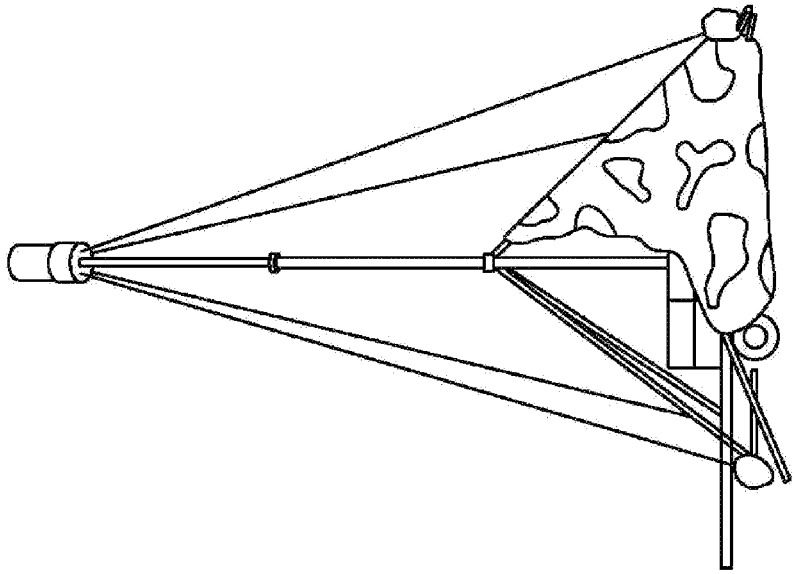

FIG. 3 (Prior Art)