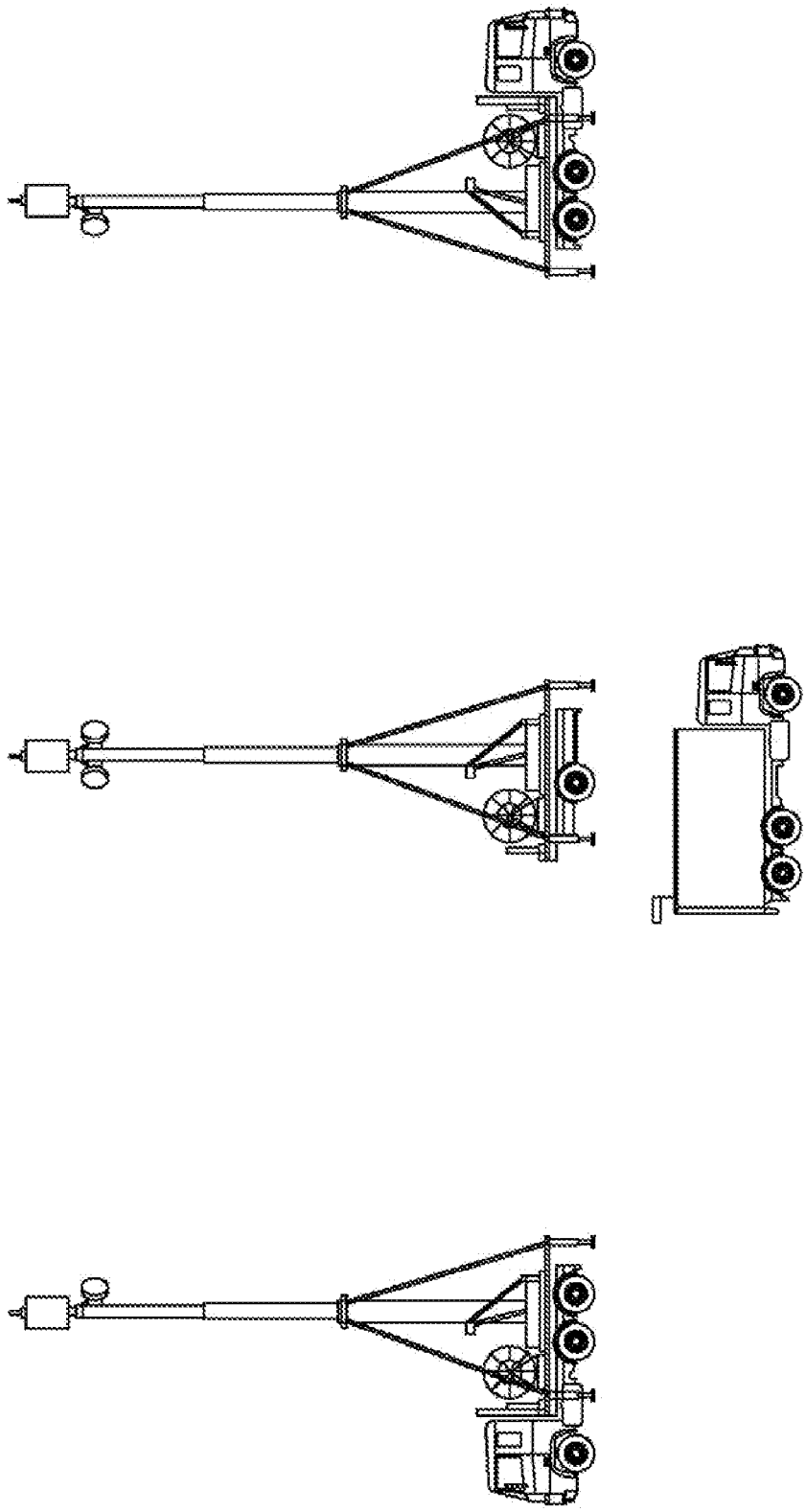

FIG. 5 (Prior Art)