FIG. 1

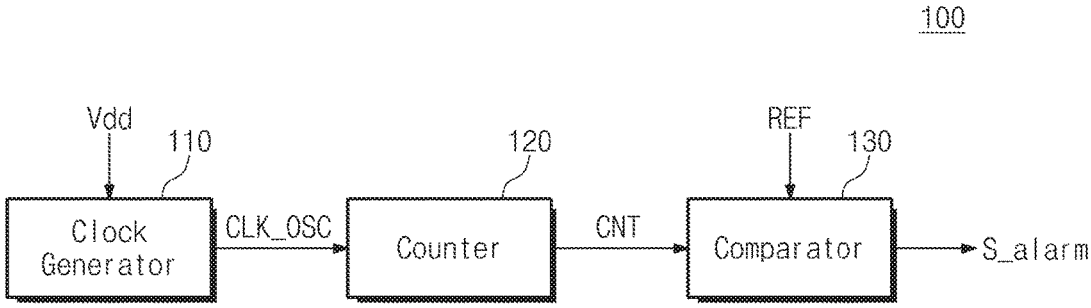
100
Vdd
110
Clock Generator
CLK_OSC
120
Counter
CNT
REF
130
Comparator
S_alarm

FIG. 2

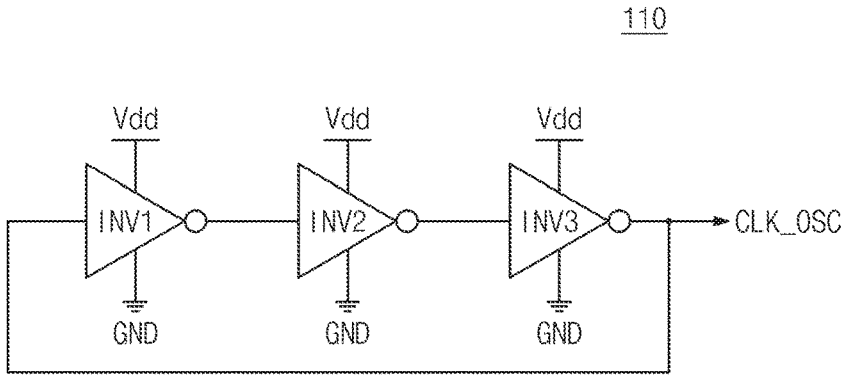
110
Vdd
INV1
GND
Vdd
INV2
GND
Vdd
INV3
GND
CLK_OSC