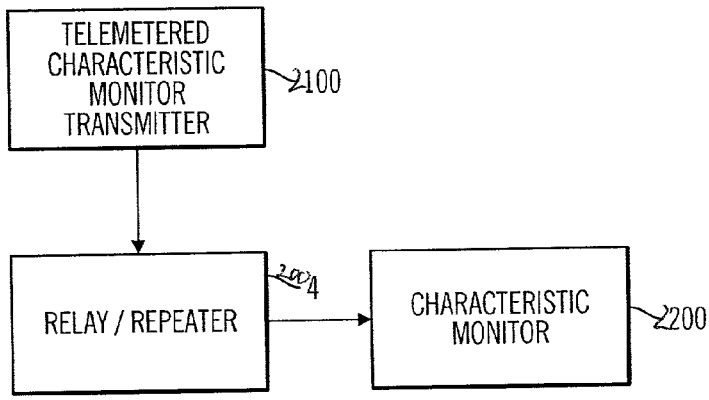
TELEMETERED CHARACTERISTIC MONITOR TRANSMITTER
2100
RELAY / REPEATER
2004
CHARACTERISTIC MONITOR
2200

FIG. 28

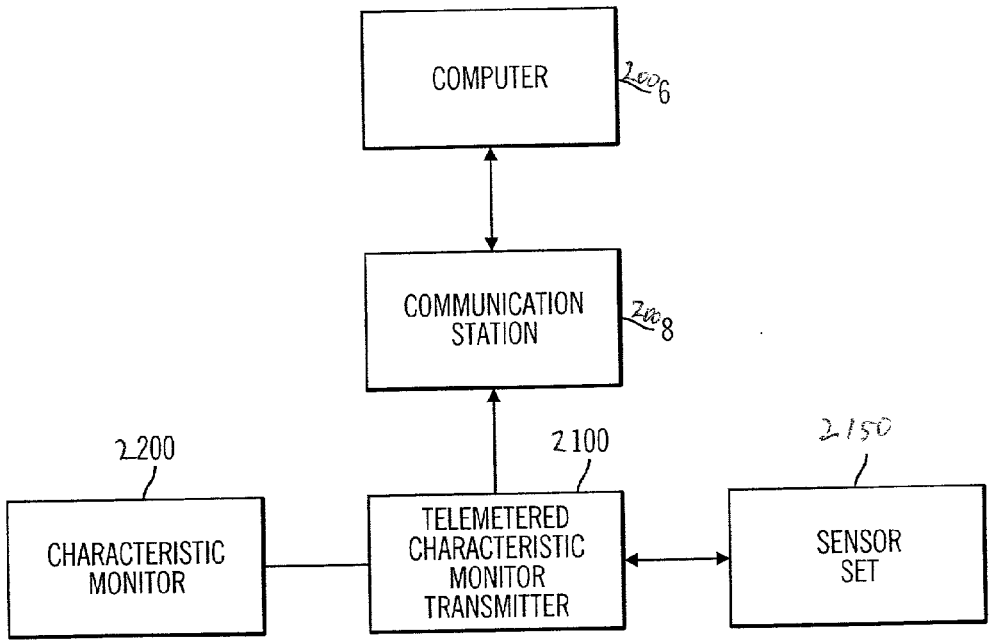
COMPUTER
2006
COMMUNICATION STATION
2008
2200
CHARACTERISTIC MONITOR
2100
TELEMETERED CHARACTERISTIC MONITOR TRANSMITTER
2150
SENSOR SET

FIG. 29