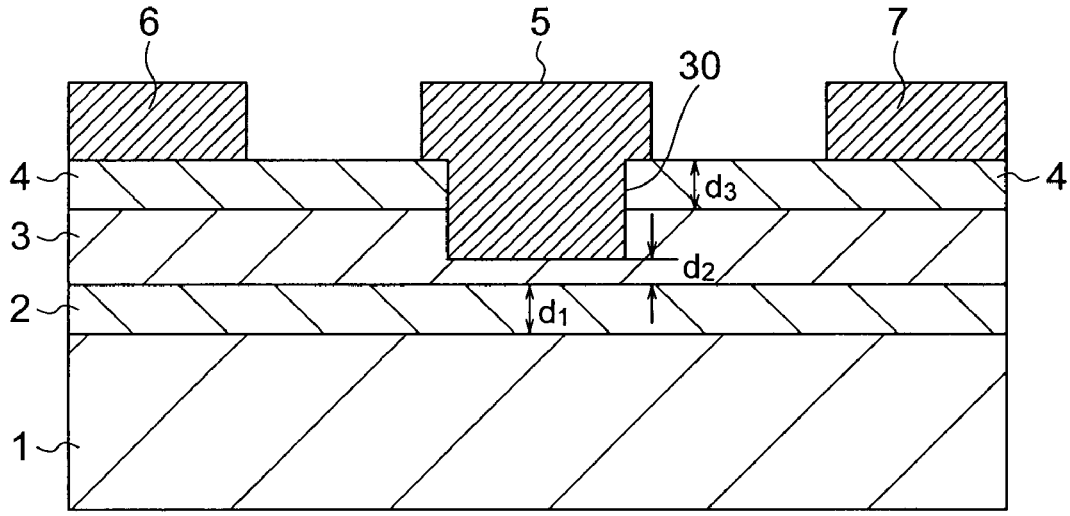
6
5
7
30
4
4
3
2
1
d3
d2
d1

FIG. 1

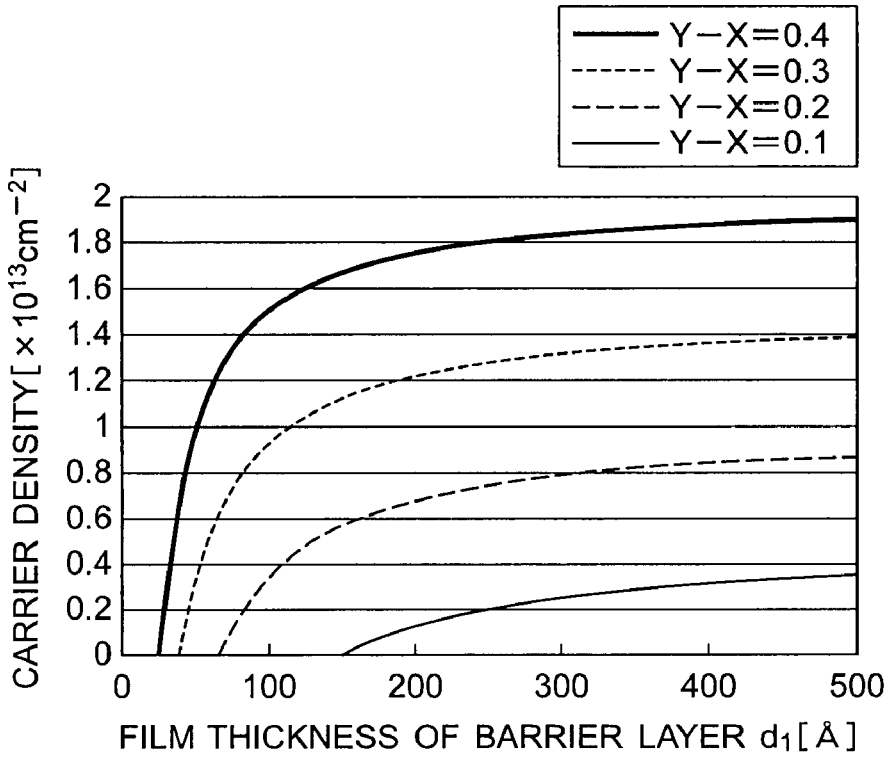
Y−X=0.4
Y−X=0.3
Y−X=0.2
Y−X=0.1
CARRIER DENSITY[×10^13cm^−2]
2
1.8
1.6
1.4
1.2
1
0.8
0.6
0.4
0.2
0
0
100
200
300
400
500
FILM THICKNESS OF BARRIER LAYER d1[Å]

FIG. 2