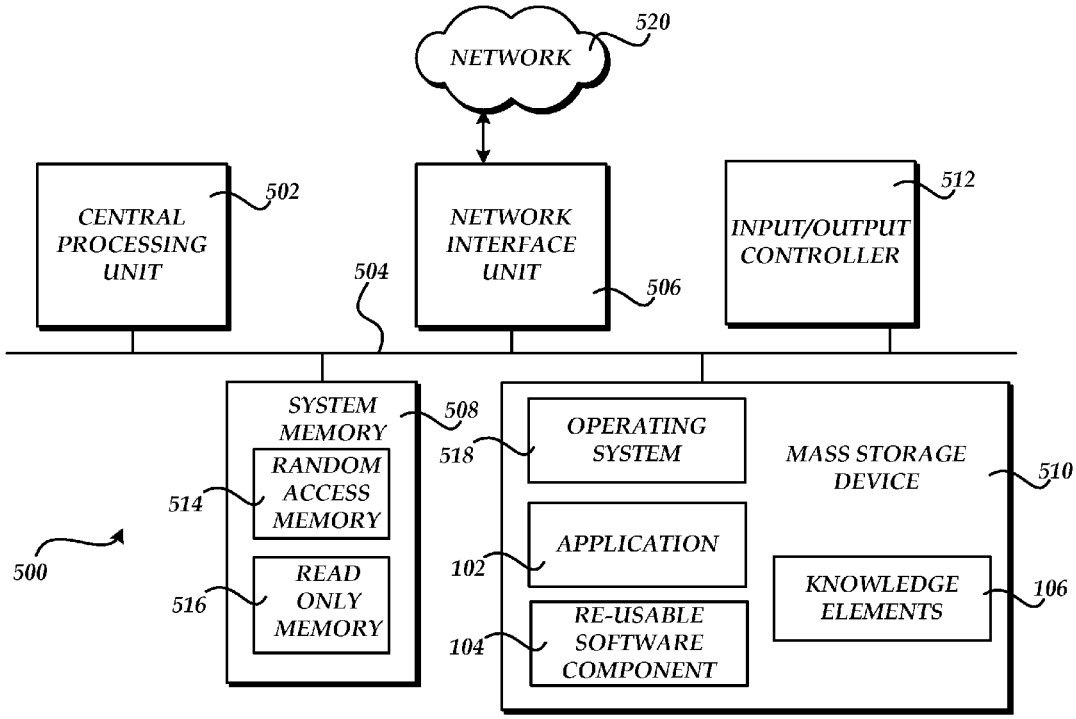
NETWORK
520
CENTRAL PROCESSING UNIT
502
NETWORK INTERFACE UNIT
506
INPUT/OUTPUT CONTROLLER
512
504
SYSTEM MEMORY
508
RANDOM ACCESS MEMORY
514
READ ONLY MEMORY
516
500
OPERATING SYSTEM
518
APPLICATION
102
RE-USABLE SOFTWARE COMPONENT
104
MASS STORAGE DEVICE
510
KNOWLEDGE ELEMENTS
106

*Fig.5*