FIG.5

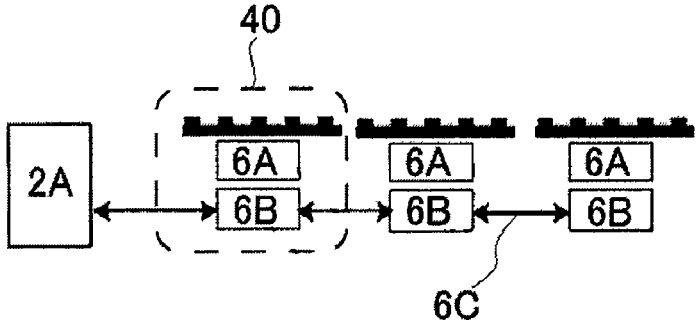

FIG.6A

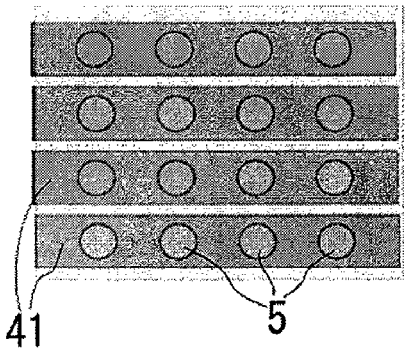

FIG.6B

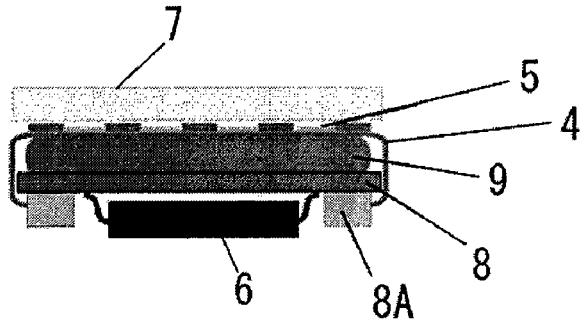
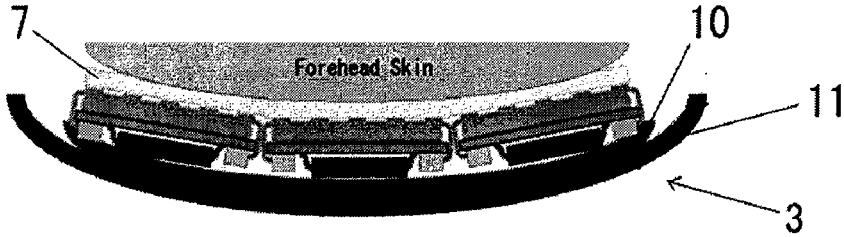
FIG.6C