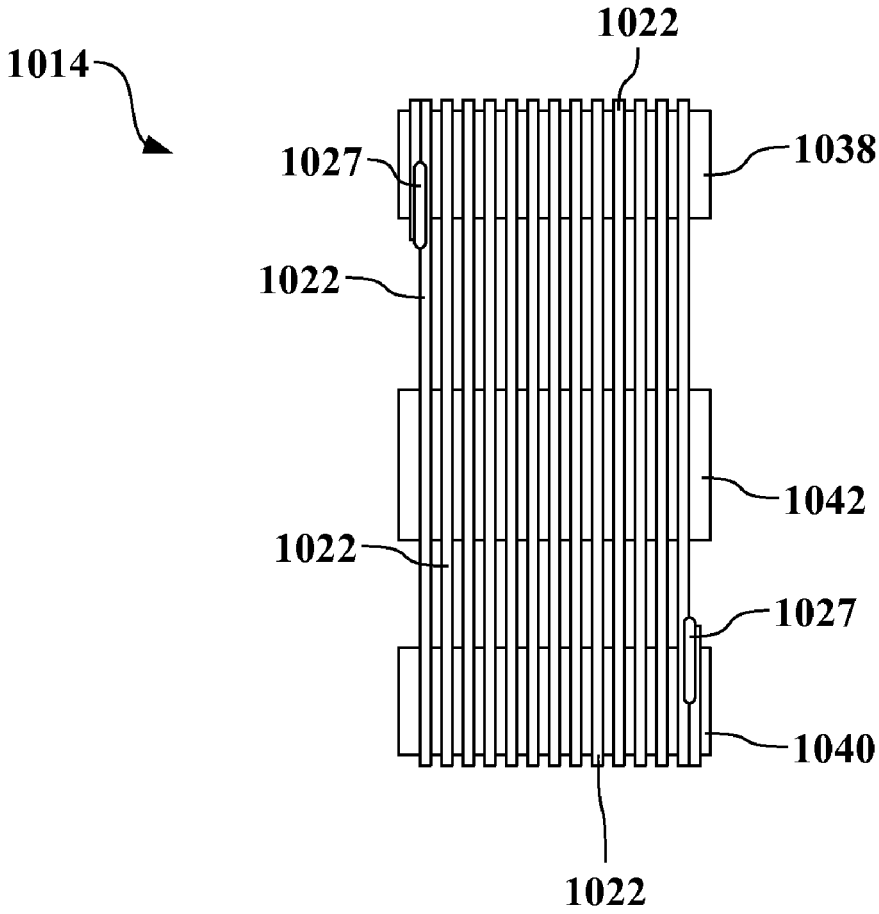

Figure 14