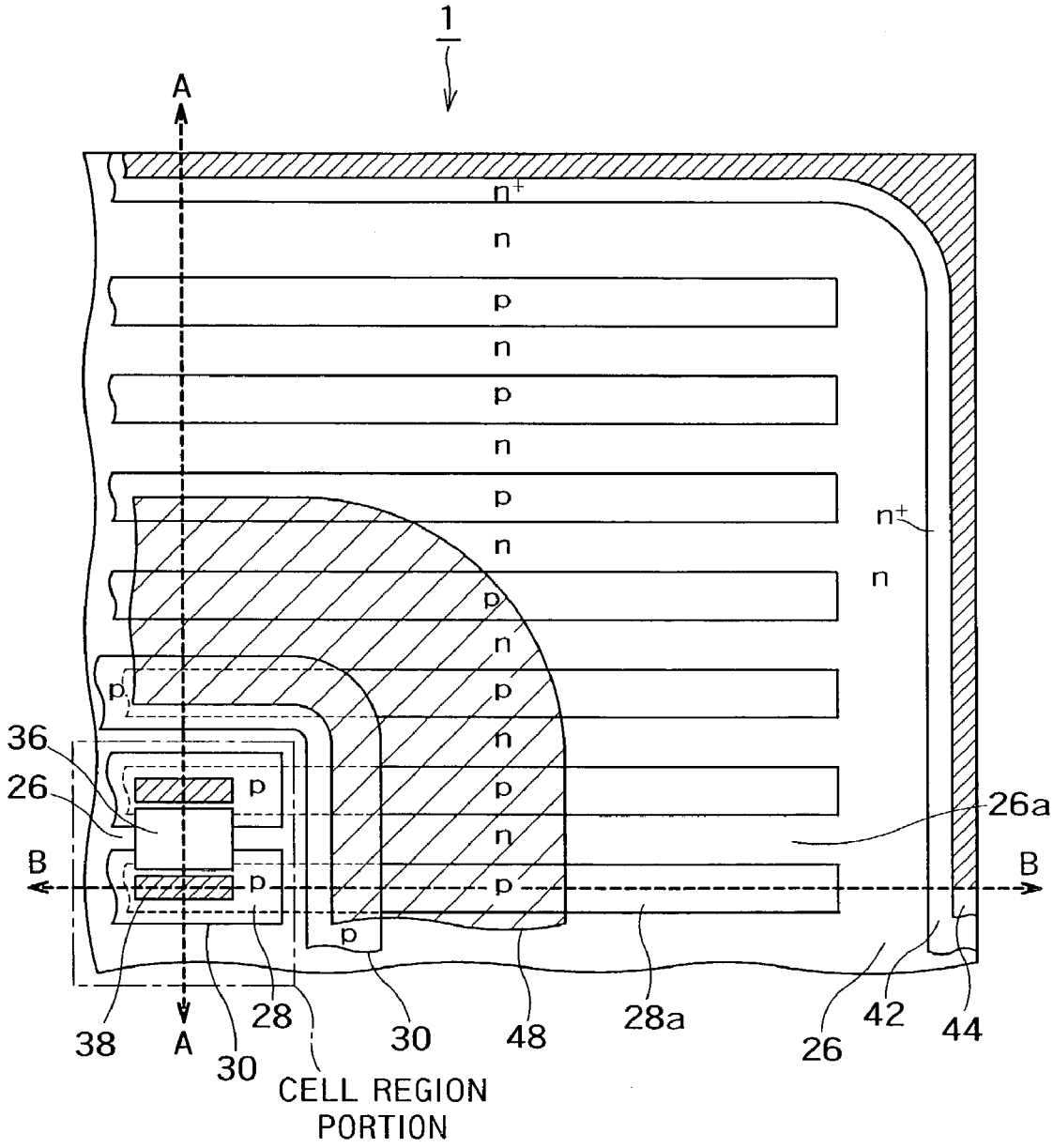
1
A
n+
n
p
n
p
n
p
n
p
n
p
n
p
n
p
n
p
n
p
n
p
n+
n
36
26
26a
B
B
38
A
30
28
30
48
28a
26
42
44
CELL REGION
PORTION

FIG. 1