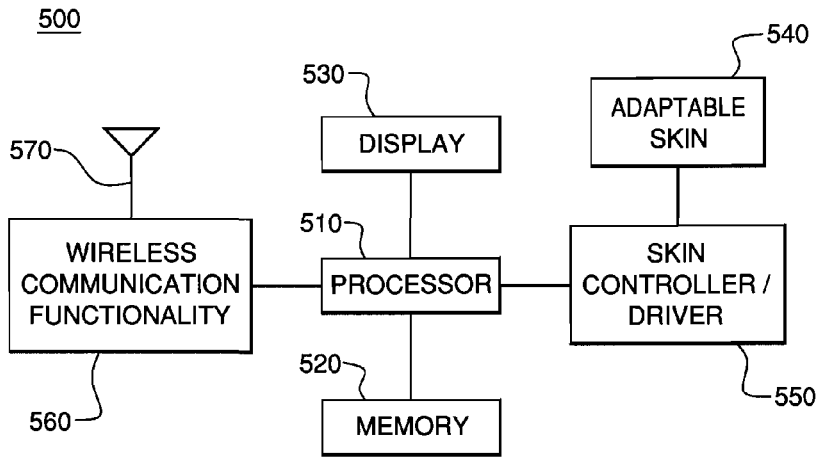
500
530
DISPLAY
540
ADAPTABLE SKIN
570
510
WIRELESS COMMUNICATION FUNCTIONALITY
PROCESSOR
SKIN CONTROLLER / DRIVER
520
MEMORY
560
550

FIG. 5

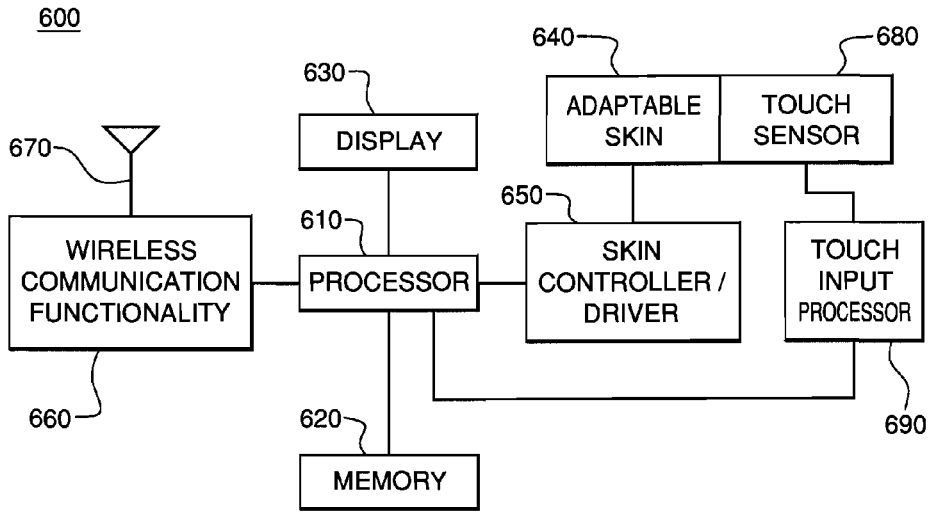
600
640
680
630
ADAPTABLE SKIN
TOUCH SENSOR
DISPLAY
670
650
610
WIRELESS COMMUNICATION FUNCTIONALITY
PROCESSOR
SKIN CONTROLLER / DRIVER
TOUCH INPUT PROCESSOR
660
620
690
MEMORY

FIG. 6