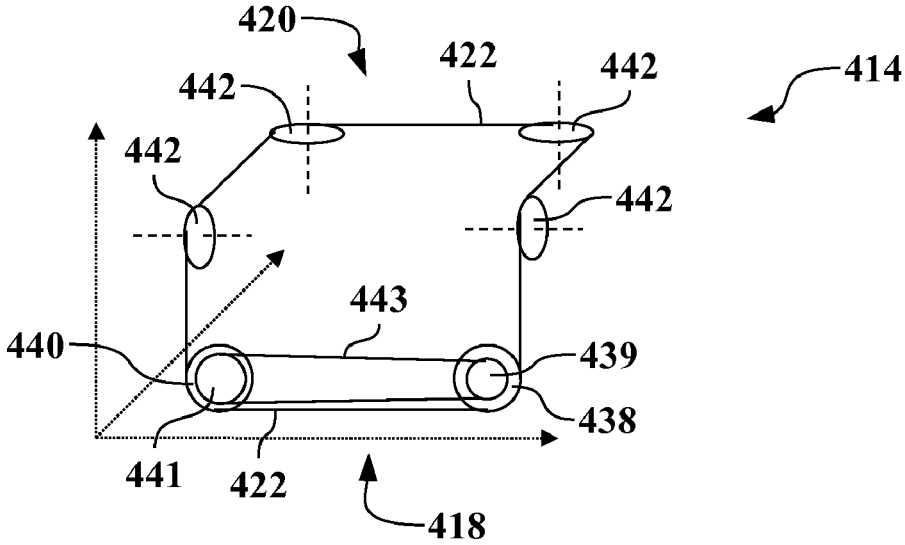

Figure 8A

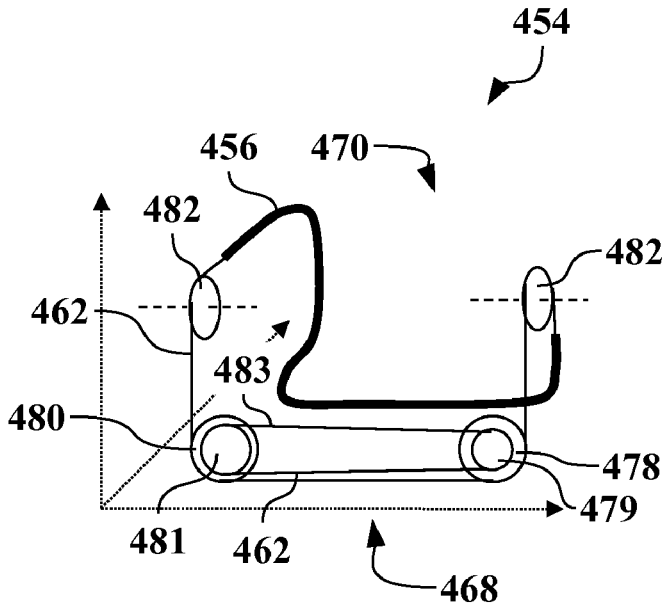

Figure 8B