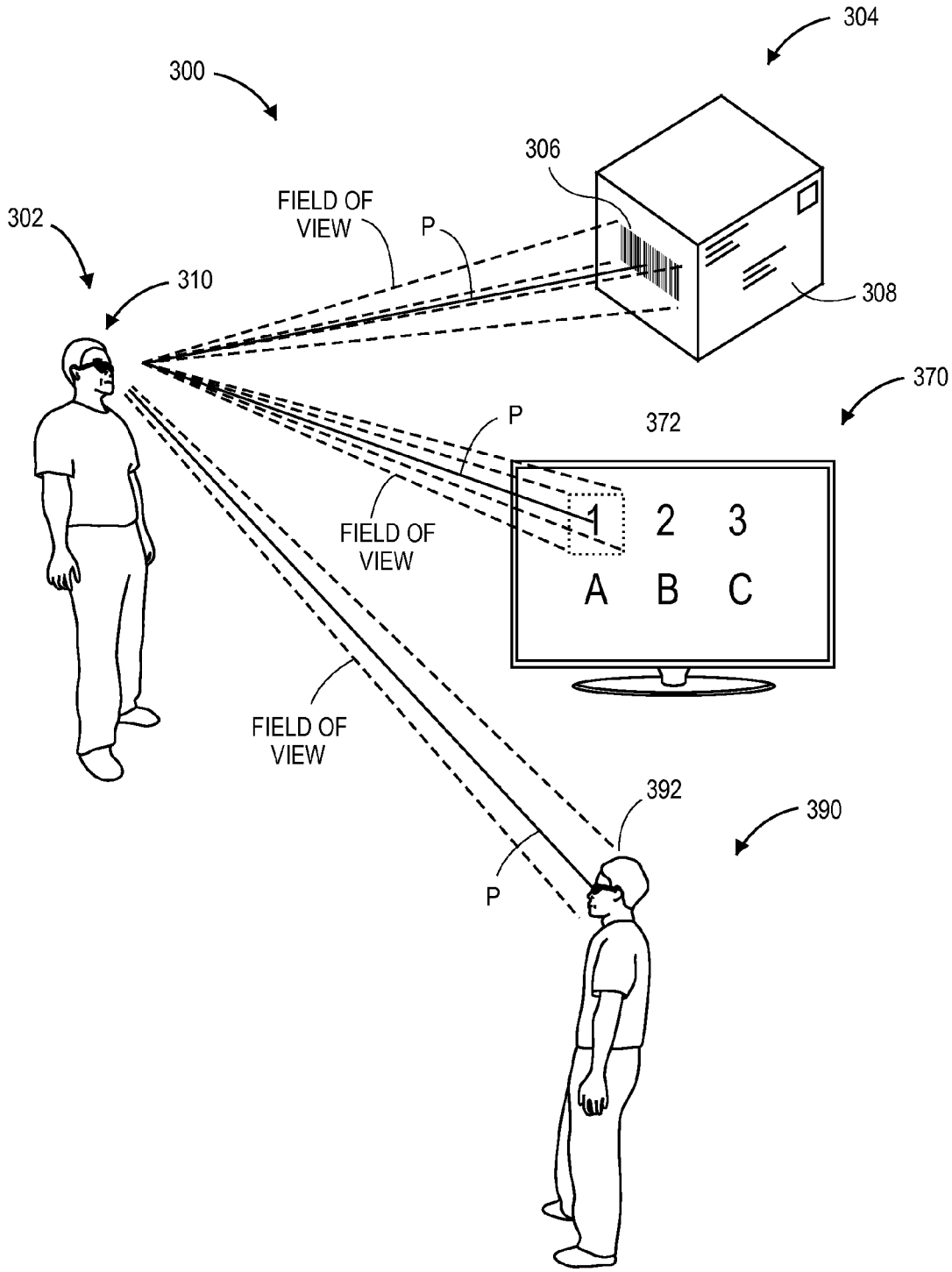
304
300
306
FIELD OF VIEW
P
302
310
308
370
P
372
FIELD OF VIEW
1 2 3
A B C
FIELD OF VIEW
392
390
P

FIG. 3