FIG. 15

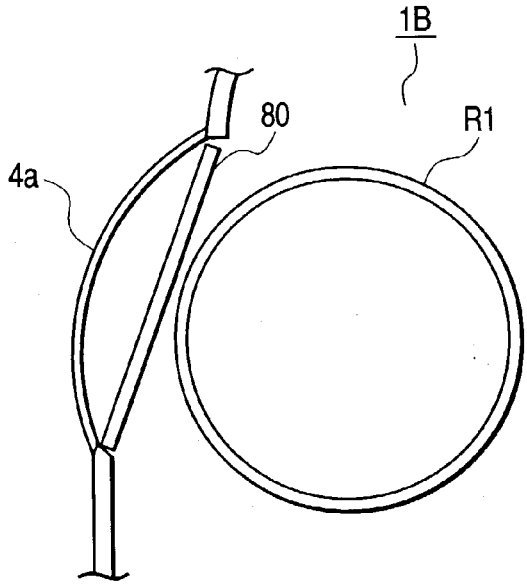
1B
80
R1
4a

FIG. 16

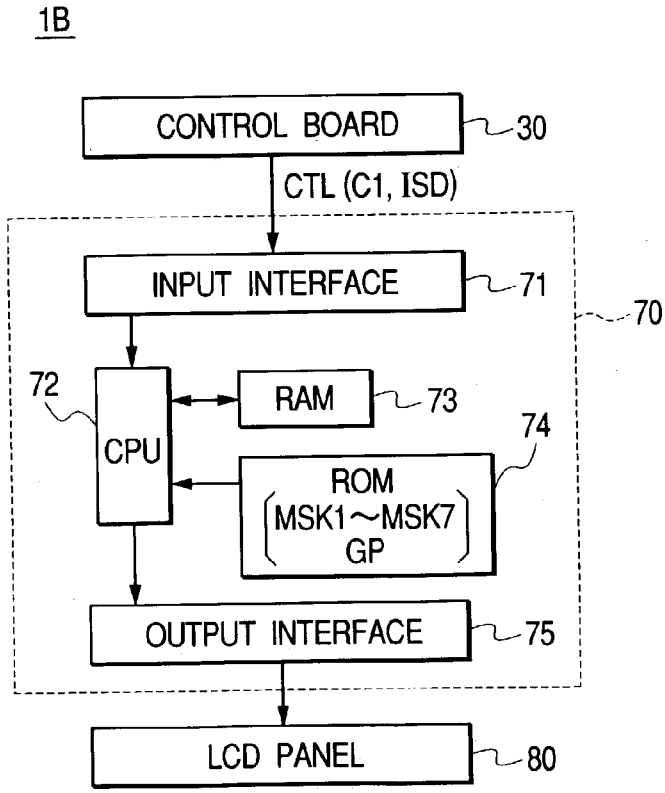
1B
CONTROL BOARD
30
CTL (C1, ISD)
INPUT INTERFACE
71
70
72
CPU
RAM
73
74
ROM
(MSK1~MSK7
GP)
OUTPUT INTERFACE
75
LCD PANEL
80