FIG. 3

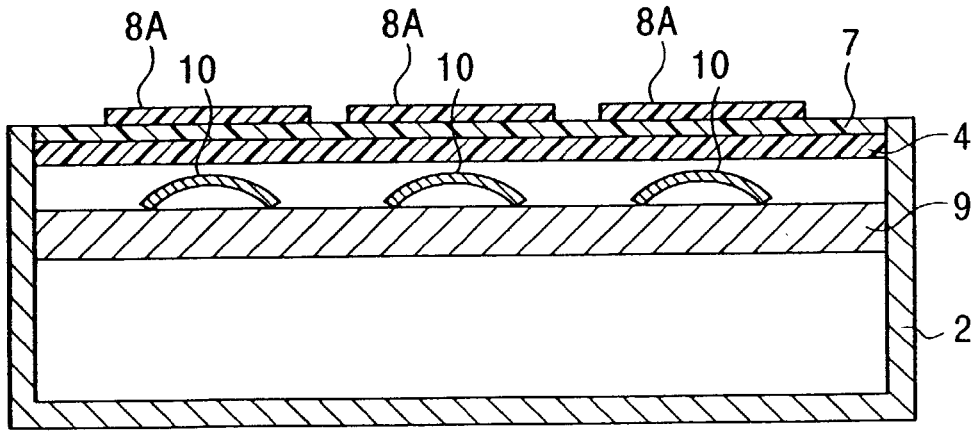
8A
10
8A
10
8A
10
7
4
9
2

FIG. 4

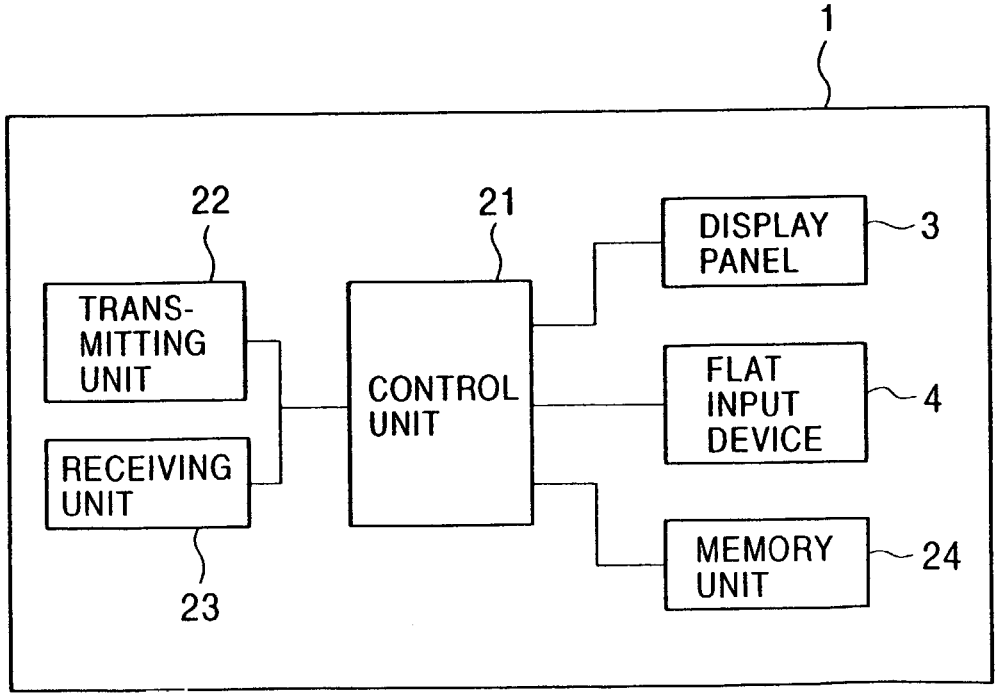
1
22
TRANS-
MITTING
UNIT
RECEIVING
UNIT
23
21
CONTROL
UNIT
DISPLAY
PANEL
3
FLAT
INPUT
DEVICE
4
MEMORY
UNIT
24