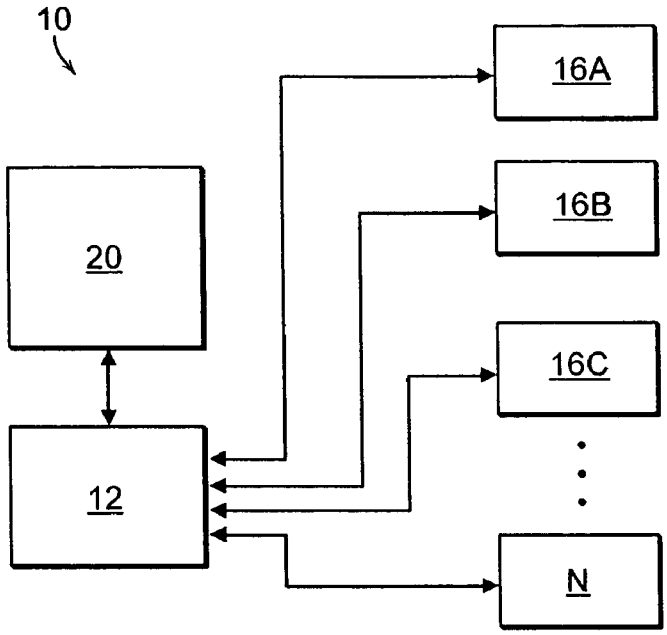

Figure 2

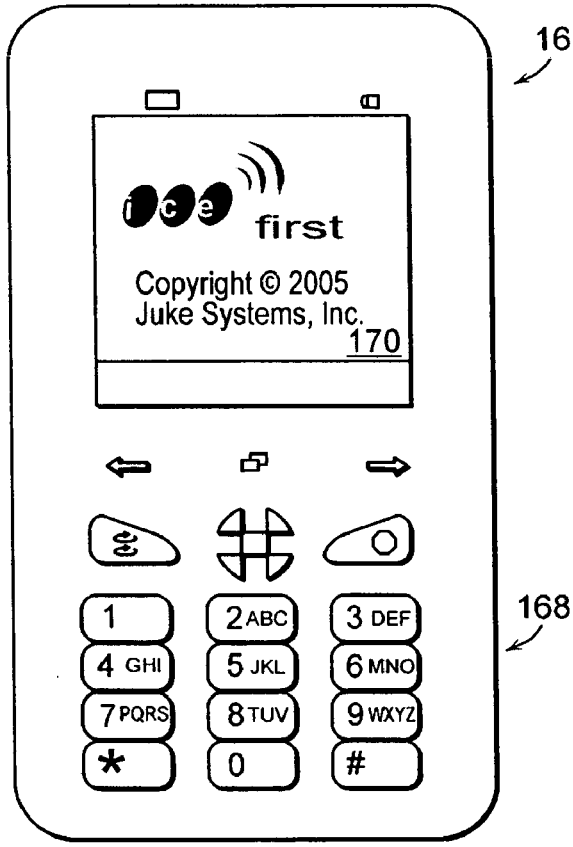

Figure 3