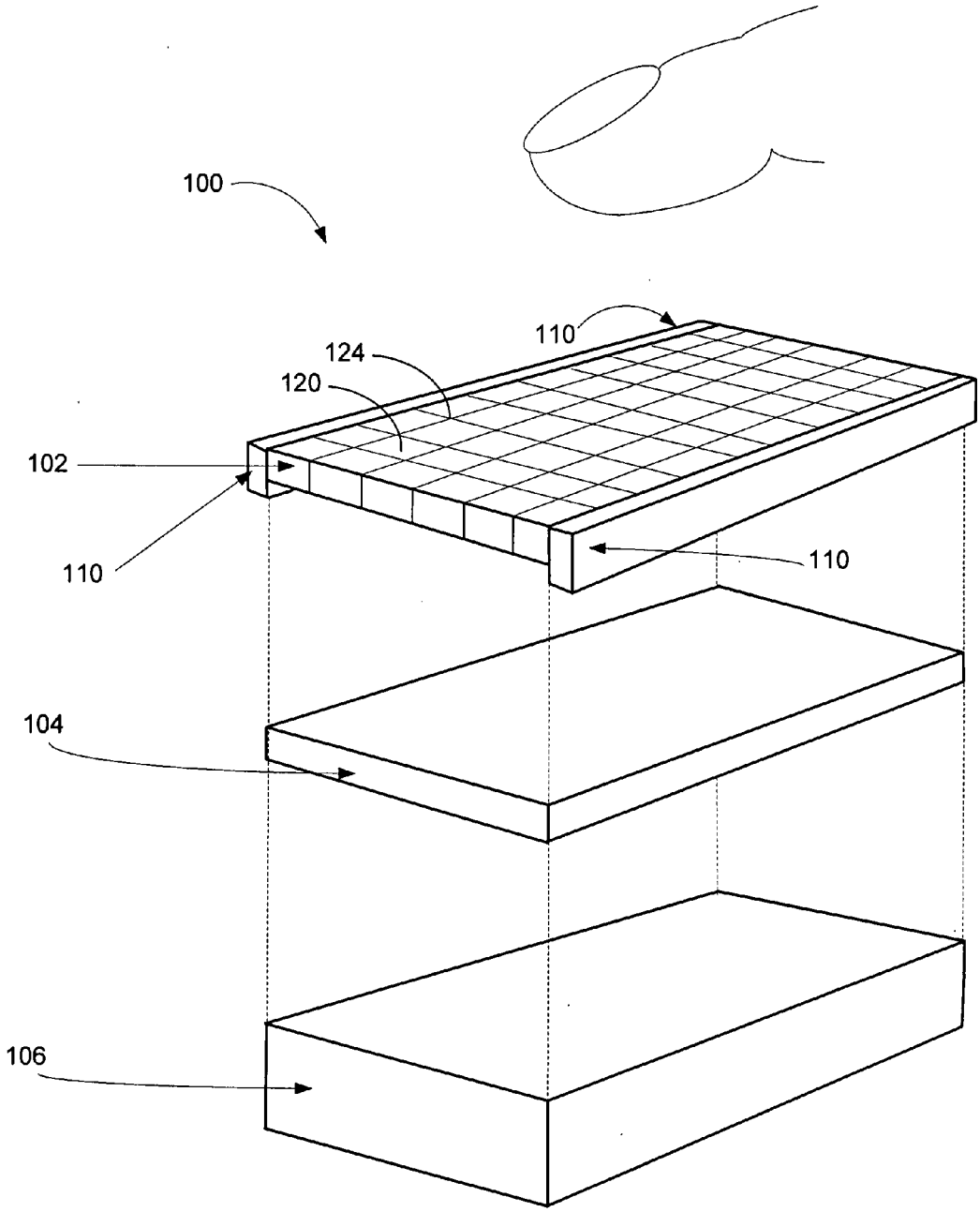

FIG 1