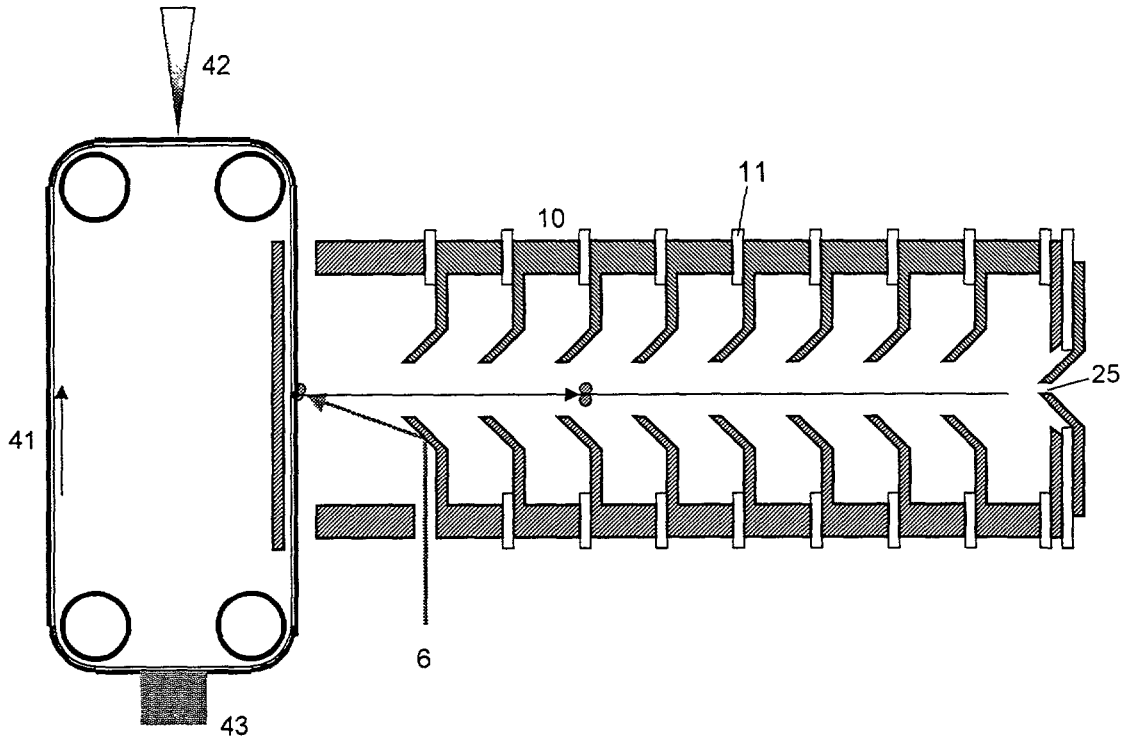

Figure 15