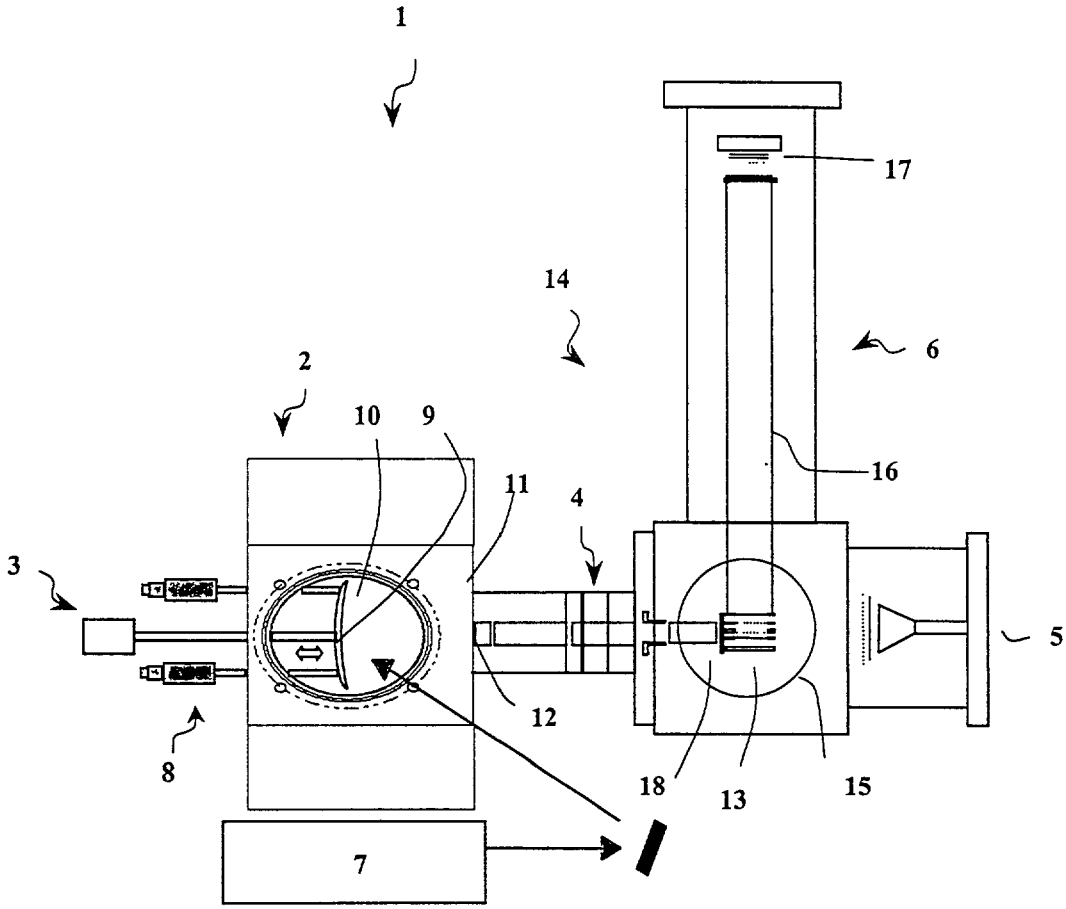

Figure 16