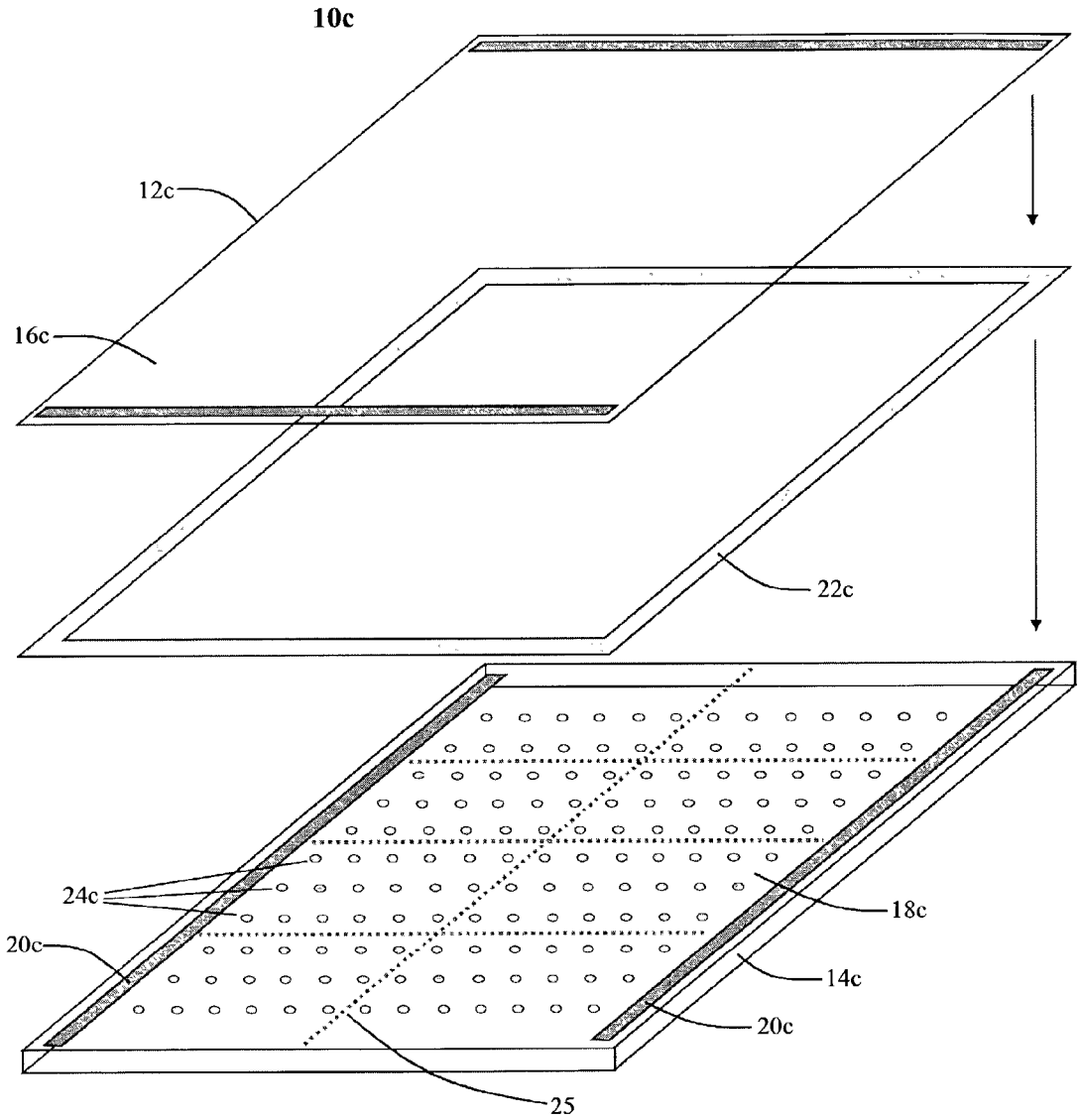

Figure 5