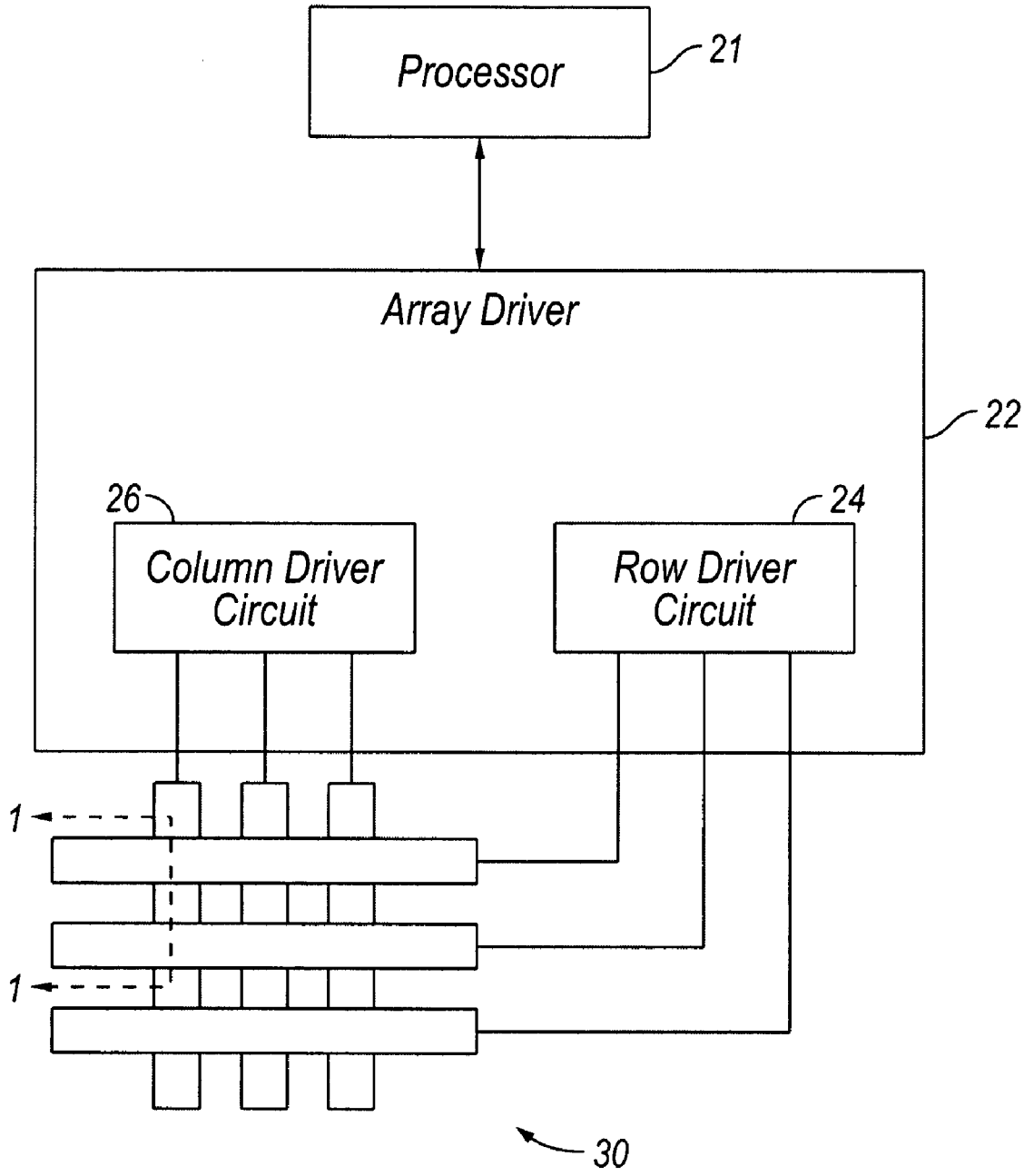
Processor
21
Array Driver
22
26
Column Driver Circuit
24
Row Driver Circuit
1
1
30

FIG. 2