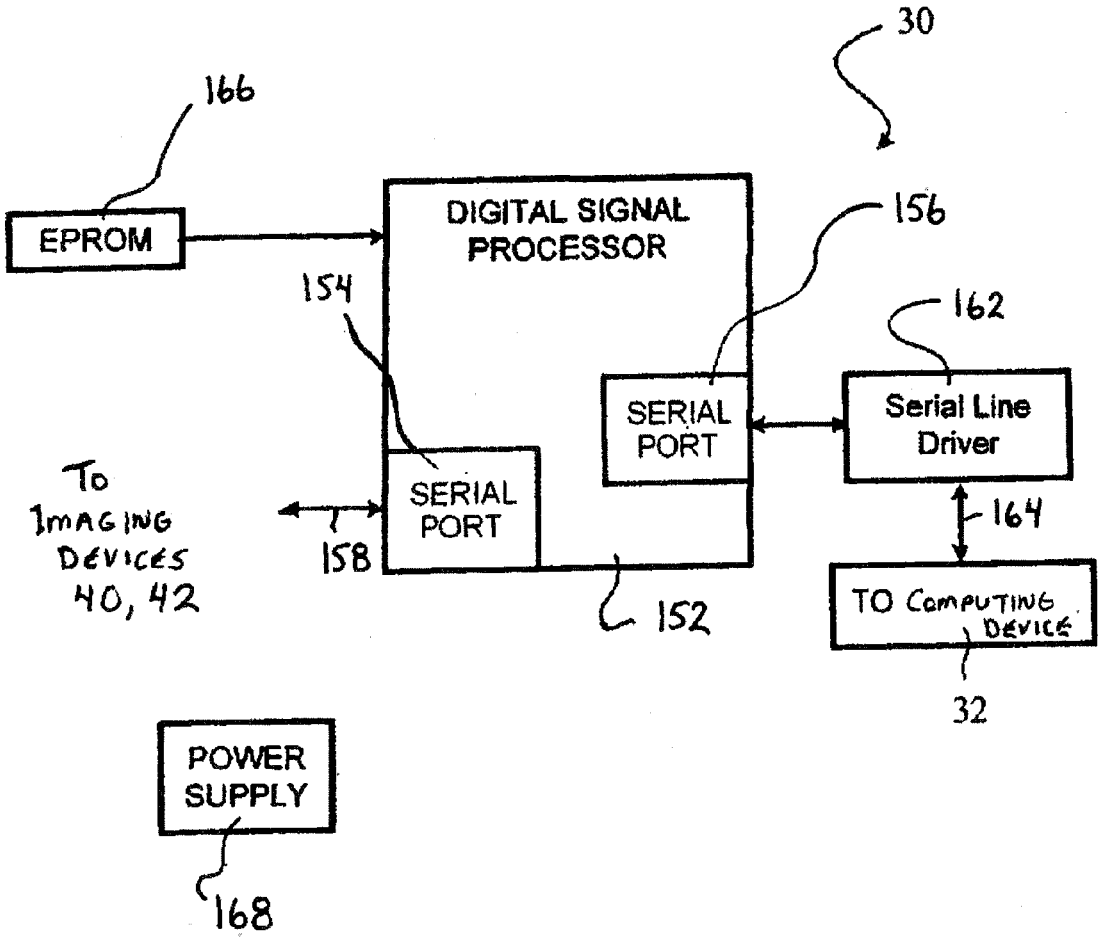
30
166
EPROM
DIGITAL SIGNAL PROCESSOR
156
154
162
SERIAL PORT
Serial Line Driver
To Imaging Devices 40, 42
SERIAL PORT
158
164
152
TO Computing Device
32
POWER SUPPLY
168

FIG. 3