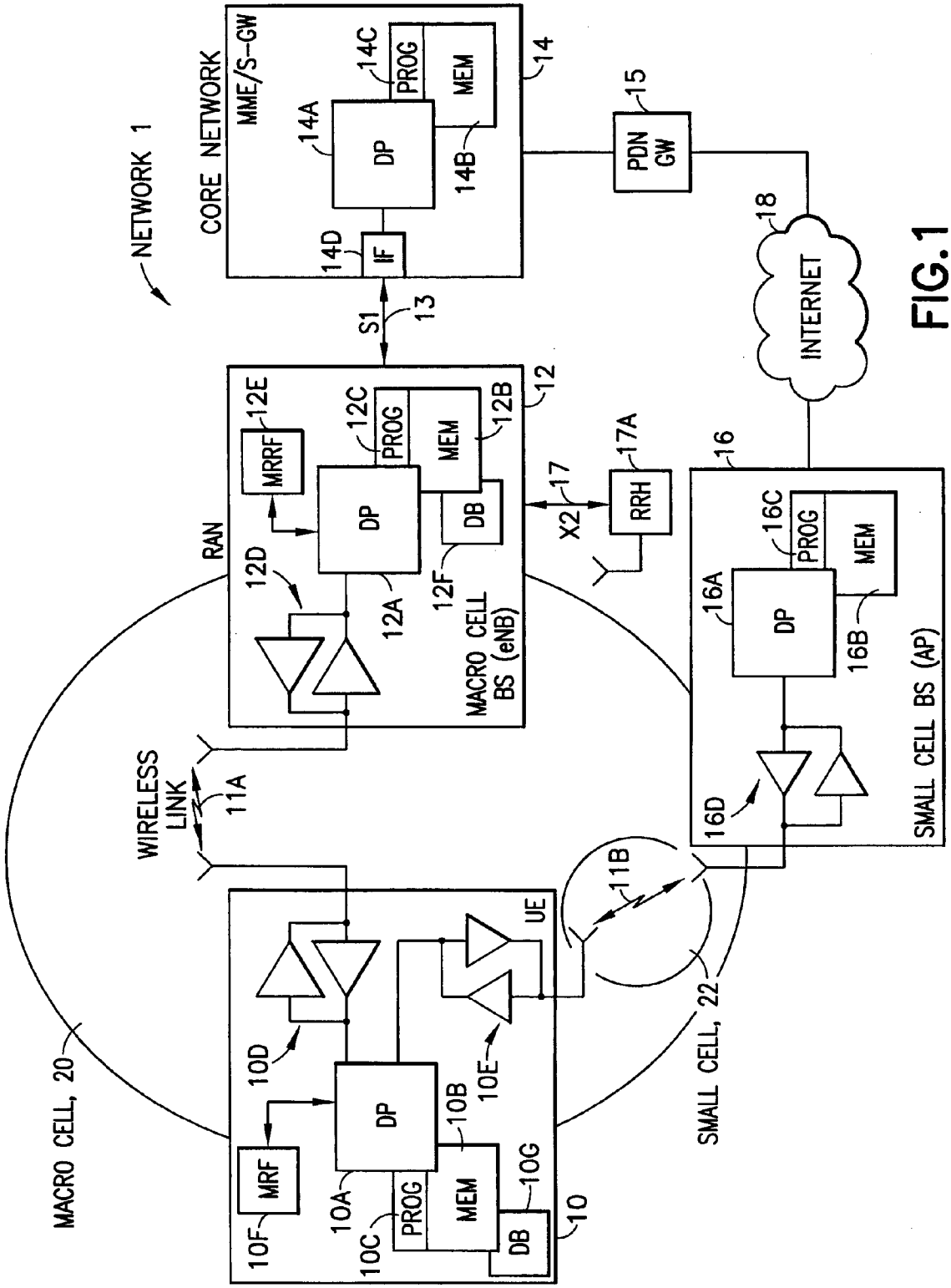
NETWORK 1
CORE NETWORK
MME/S-GW
14
14A
DP
14B
MEM
14C
PROG
14D
IF
S1
13
PDN GW
15
INTERNET
18
RAN
12
12A
DP
12B
MEM
12C
PROG
12D
12E
MRRF
12F
DB
MACRO CELL BS (eNB)
X2
17
17A
RRH
16
16A
DP
16B
MEM
16C
PROG
16D
SMALL CELL BS (AP)
WIRELESS LINK
11A
11B
UE
10
10A
DP
10B
MEM
10C
PROG
10D
10E
10F
MRF
10G
DB
MACRO CELL, 20
SMALL CELL, 22

FIG. 1