Fig. 15

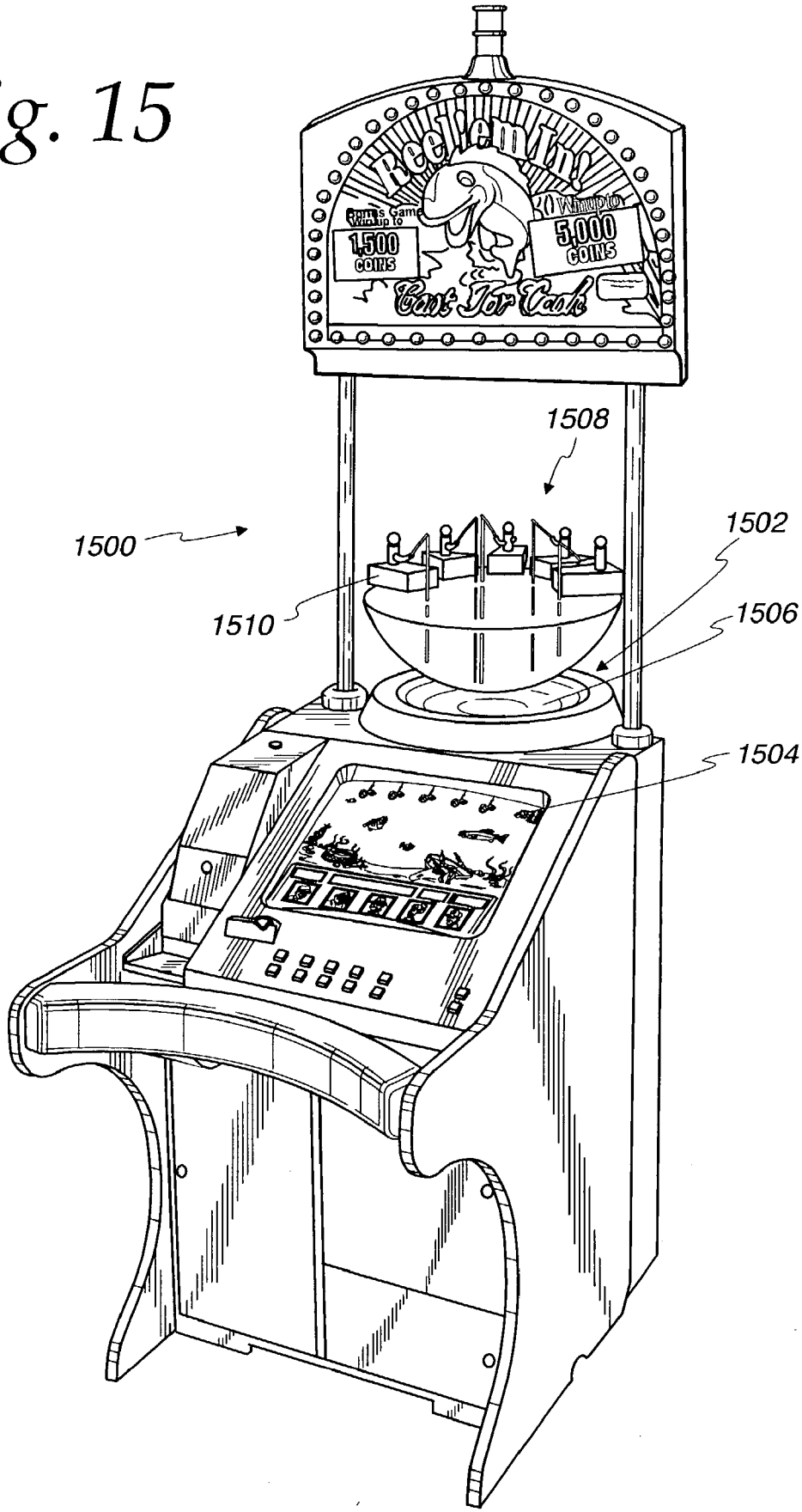
Reel Em In!
Bonus Game Win up to
1,500 COINS
Win up to
5,000 COINS
Cast For Cash
1508
1500
1502
1510
1506
1504